Naval Facilities Engineering Command
200 Stovall Street
Alexandria, Virginia 22332-2300



# MAINTENANCE AND OPERATION OF ACTIVE SOLAR HEATING SYSTEMS

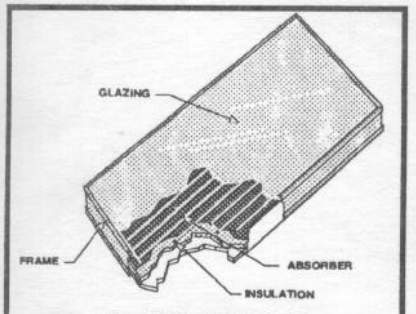


OPERATION

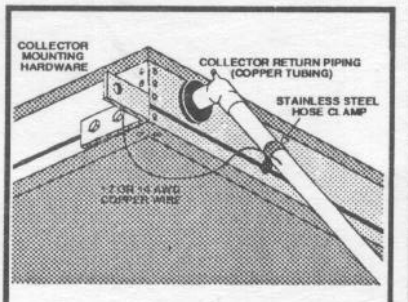


INSPECTION

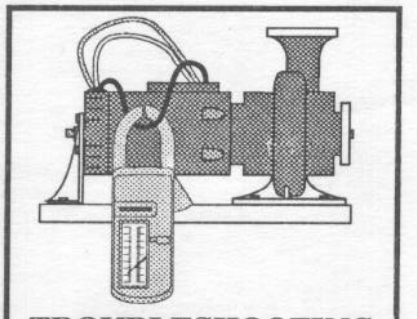

TROUBLESHOOTING

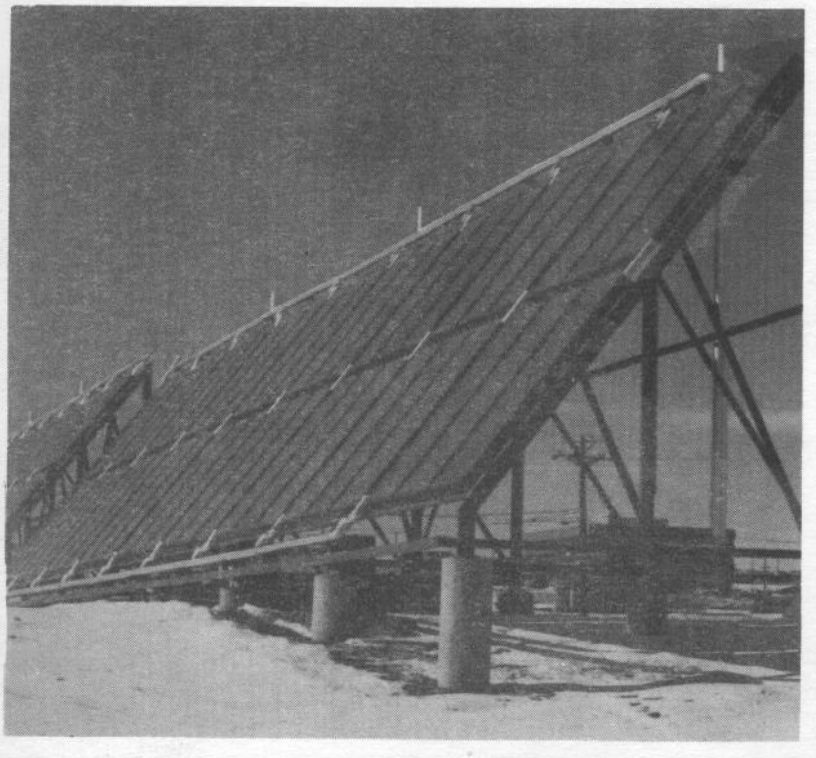

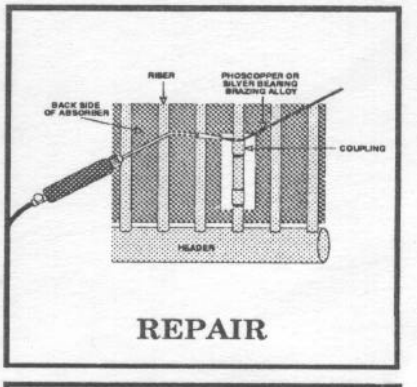


REPAIR

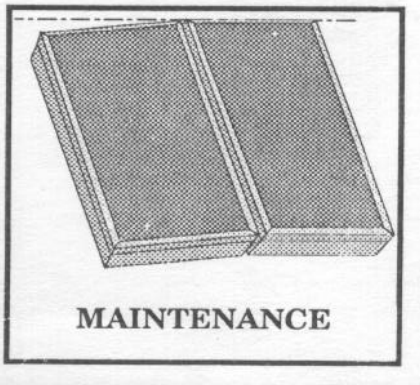

MAINTENANCE

S/N 0525-LP-193-4800

NAVFAC MO-405
**JULY 1990**

SNDL DISTRIBUTION

(25 copies each):

FKA1C COMNAVFACENGCOM

FKN1 EFDs

(10 Copies each):

FA46 PWCLANT
FB54 PWCPAC

FKP7 NAVSHIPYDs
FT104 PWCCNET

HQ U.S. AIR FORCE
Engineering And Services Center
Tyndall AFB, FL 32403

U.S. ARMY
Office of Engineers
Washington, DC 20314 (DAEN-MPO)

(2 Copies each):

E3A LABONR
FA6 NASLANT
FA7 NAVSTALANT
FA10 SUBASELANT
FA18 NAVPHIBASELANT
FA24 COMNAVBASELANT
FB7 NASPAC
FB10 NAVSTAPAC
FB13 SUBBASEPAC
FB21 NAVPHIBASEPAC
FB28 COMNAVBASEPAC
FB30 NAVSHIPREPFAC
FB36 NAVFACPAC
FB45 TRIREFFACPAC
FC3 COMNAVACTEUR
FC5 NAVSUPACTEUR
FC7 NAVSTAEUR
FC14 NASEUR
FD4 OCEANCEN
FFl COMNAVDICT Washington,DC
FF3 NAVSTACNO
FF6 NAVOBSY
FF32 FLDSUPPACT
FF38 USNA
FF42 NAVPGSCOL
FG2 NAVCOMMSTA
FH3 NAVHOSP
FJA4 NAVAL HOME
FKA8F5 SUBASE
FKM9 NSC

FKM12 NAVPETOFF
FKM13 SPCC
FKN2 CBCs
FKN3 OICCS
FKN7 NEESA
FKN10 NAVSUPPFAC
FKN11 NAVCIVENGRLAB
FKP1B WPNSTAs
FKP1J NAVORDSTAs
FKP16 NAVSSES
FKR1A NAS
FKR1B NAVAVNDEPOT
FKR3A NAVAIRENGCEN
FR3 NASRESFOR
FR4 NAF
FT6 NASCNET
FT9 NAVAVMUSEUM
FT13 NATTC
FT28 NETC
FT31 NTC
FT37 NAVSCOLCECOFF
FT38 NAVSUBTRACENPAC
FT39 NAVTECHTRACEN
FT55 NAVSCSCOL
V3 COMCAB
V4 MCAF
V5 MCAS
V8 CG MCRD
V16 CG MCB
V23 CG MCLB

Additional Copies may be obtained from:
Navy Publications and Forms Center
5801 Tabor Avenue
Philadelphia, PA 19120

## FOREWORD

This Maintenance and Operations (MO) Manual contains information on the operation, inspection, troubleshooting, repair and maintenance of liquid solar heating systems. That is, solar heating or cooling systems using liquid, rather than air, to gather heat, pumps to move it and tanks of water to store it.

The standards and methods presented are intended to accomplish the inspection, maintenance, and repair of liquid solar heating and cooling systems in the most efficient and cost effective manner.

Recommendations or suggestions for modification, or additional information and instructions that will improve the publication and motivate its use, are invited and should be forwarded to the Commander, Naval Facilities Engineering Command (Attention: Code 163), 200 Stovall Street, Alexandria, VA, 22332-2300. Telephone: Commercial (202)-325-0045, Autovon 221-0045.

This publication has been reviewed and is approved for certification as an official publication of this command in accordance with SECNAVINST. 5600.16.

D. B. CAMPBELL
Deputy Commander for
Public Works

## NOTICE



The practices and procedures presented in this manual are recommendations only and do not supersede any applicable local, state or national building, electrical, plumbing or other code requirements. The reader is responsible for determining the applicable code requirements and remaining in compliance with them.

## ABSTRACT

This manual is a guide for engineers, planners, maintenance supervisors and all maintenance personnel involved in the operation, inspection, troubleshooting, repair and maintenance of liquid solar heating systems. That is, solar heating or cooling systems using liquid, rather than air, to gather heat, pumps to move it and tanks of water to store it. The manual is designed to be used in the field by the personnel performing the actual inspection, maintenance or repair of solar systems.

## CHANGE CONTROL SHEET

Document all changes, page replacements, and pen and ink alterations posted in this manual.

| AMENDMENT NUMBER | AMENDMENT DATE | POST DATE | POSTED BY (LAST NAME) |
|---|---|---|---|
| | | | |
| | | | |
| | | | |
| | | | |
| | | | |
| | | | |
| | | | |
| | | | |
| | | | |
| | | | |
| | | | |
| | | | |
| | | | |
| | | | |

# TABLE OF CONTENTS


1. Introduction. . . . . 1
    1.1 Purpose of this Manual. . . . . 1
    1.2 Scope of this Manual. . . . . 2
    1.3 How to Use this Manual. . . . . 3
        1.3.1 Review of Manual Structure. . . . . 3
        1.3.2 Worksheets. . . . . 3
        1.3.3 Self-study Questions. . . . . 3
        1.3.4 Appendices. . . . . 3
        1.3.5 Notes, Cautions and Warnings. . . . . 3
        1.3.6 Chapter and Page Format. . . . . 4

2. Operation. . . . . 5
    2.1 Basic System Configuration. . . . . 5
        2.1.1 Definition of Loops . . . . . 5
        2.1.2 Common Components. . . . . 6
        2.1.3 Common Load Connections. . . . . 8
    2.2 Basic Configuration of Closed-Loop Systems. . . . 14
    2.3 Basic Configuration of Drainback Systems . . . . 16
    2.4 Basic Configuration of Draindown Systems. . . . 17
    2.5 Basic Configuration of Thermosiphon Systems . . . 18
    2.6 Basic Configuration of Integrated Collector-Storage System. . . . . 19
    2.7 Component Operation. . . . . 20
        2.7.1 Solar Collectors . . . . . 20
        2.7.2 Pumps. . . . . 23
        2.7.3 Piping. . . . . 25
        2.7.4 Solar Fluids. . . . . 26
        2.7.5 Heat Exchangers. . . . . 28
        2.7.6 Storage Tanks. . . . . 30
        2.7.7 Valves and Other Components. . . . . 33
        2.7.8 Pipe and Tank Insulation. . . . . 47
        2.7.9 Controls and Sensors. . . . . 50

2.7.10 Gauges. . . . . 55
2.8 Questions for self-study. . . . . 58

3. Inspection. . . . . 61
3.1 Inspection Procedures. . . . . 62
3.1.1 Solar Collectors. . . . . 62
3.1.2 Exterior Piping. . . . . 70
3.1.3 Interior Piping. . . . . 72
3.1.4 Pumps. . . . . 75
3.1.5 Heat Exchangers. . . . . 81
3.1.6 Solar Fluids. . . . . 82
3.1.7 Controls . . . . . 85
3.1.8 Storage Tanks. . . . . 93
3.2 Sample Inspection Checklist. . . . . 94
3.3 Simplified Inspection Procedures for Small Systems . 99
3.4 Questions for Self-study . . . . . 102

4. Troubleshooting . . . . . 105
4.1 Troubleshooting Techniques . . . . . 105
4.2 Troubleshooting Chart. . . . . 108
4.3 Specific Troubleshooting Operations. . . . . 111
4.3.1 Sensor and Sensor Wiring . . . . . 111
4.3.2 Controls . . . . . 115
4.3.3 Airbound Loops . . . . . 120
4.3.4 Pumps. . . . . 123
4.3.5 Flow Rates . . . . . 125
4.3.6 Fluids . . . . . 126
4.3.7 Piping Joints . . . . . 129
4.3.8 Valves . . . . . 130
4.3.9 Heat Exchangers. . . . . 131
4.3.10 Insulation. . . . . 131
4.3.11 Gauges . . . . . 132
4.3.12 Storage Tanks . . . . . 132
4.4 Questions for Self-study . . . . . 133

5. Repair. . . . . 137
5.1 Repair or Replace? . . . . . 137
5.2 Repair and Replacement Procedures . . . . . 141
5.2.1 Solar Collectors . . . . . 141
5.2.2 Interior and Exterior Piping . . . . . 154
5.2.3 Dry Rotor Pumps . . . . . 162
5.2.4 Wet Rotor Pumps . . . . . 168
5.2.5 Heat Exchangers. . . . . 171
5.2.6 Solar Fluids . . . . . 175

5.2.7 Solar Controls . . . . . 187
5.2.8 Storage Tanks . . . . . 190
5.3 Sample Repair Record Sheet. . . . . 195
5.4 Questions for Self-study . . . . . 197

6. Preventive Maintenance . . . . . 201
6.1 Maintenance Procedures . . . . . 201
6.1.1 Solar Collectors . . . . . 201
6.1.2 Interior and Exterior Piping . . . . . 209
6.1.3 Pumps . . . . . 212
6.1.4 Heat Exchangers. . . . . 214
6.1.5 Solar Fluids . . . . . 216
6.1.6 Controls . . . . . 217
6.1.7 Storage Tanks . . . . . 220
6.2 Sample Maintenance Checklist . . . . . 222
6.3 Questions for Self-study . . . . . 226

Bibliography . . . . . Bibliography-1

Appendix A. Standardized System Designs. . . . . A-1
Appendix B: Rules of Thumb for Solar Systems . . . . . B-1
Appendix C: Tool, Material and Spare Parts Lists . . . . . C-1
Appendix D: Product and Supplier Information . . . . . D-1
Appendix E: Fluids and Materials Compatibility. . . . . E-1
Appendix F: Answers to Self-study Questions . . . . . F-1

Index . . . . . Index-1

LIST OF FIGURES


Figure 2-1: A Piping Loop . . . . . 5
Figure 2-2: A Recirculating DHW System . . . . . 6
Figure 2-3: A Simplified Solar System . 7
Figure 2-4: A Properly Piped Flat-Plate Collector Array . . . 8
Figure 2-5: Solar Storage Tank in Series With DHW Auxiliary Heater . . . . . 9
Figure 2-6: A Forced Air Heating System . . . . . 10
Figure 2-7: A Hydronic Heating System . . . . . 11
Figure 2-8: An Absorption Cooling System . . . . . 12
Figure 2-9: A Pool Heating System. . . . . 13
Figure 2-10: Fluid in a Loop . . . . . 14
Figure 2-11: A Closed-Loop Solar Heating System. . . . . 15
Figure 2-12: A Drainback Solar Heating System . . . . . 16
Figure 2-13: A Draindown Solar Heating System . . . . . 17
Figure 2-14: A Thermosiphon System . . . . . 18
Figure 2-15: An ICS System . . . . . 19
Figure 2-16: Direct, Diffuse and Reflected Solar Radiation . . 20
Figure 2-17: A Typical Flat-plate Solar Collector . . . . . 21
Figure 2-18: Single and Double Wall Evacuated Tube Collectors 22
Figure 2-19: An Unglazed Pool Heating Solar Collector . . . 23
Figure 2-20: Wet Rotor Circulating Pumps . . . . . 24
Figure 2-21: Dry Rotor Circulating Pumps . . . . . 25
Figure 2-22: A Tube-in-Tube Heat Exchanger . . . . . 29
Figure 2-23: A Coil-in-Tank Heat Exchanger . . . . . 29
Figure 2-24: A Shell and Tube Heat Exchanger . . . . . 30
Figure 2-25: Glass Lined Storage Tank . . . . . 31
Figure 2-26: Stone Lined Storage Tank . . . . . 32
Figure 2-27: A Gate Valve and a Ball Valve . . . . . 34
Figure 2-28: Balancing Valves and Thermometers Installed on a Collector Array. . . . . 35
Figure 2-29: Swing and Spring Check Valves . . . . . 35
Figure 2-30: Pressure Relief Valves . . . . . 36
Figure 2-31: A Temperature and Pressure Relief Valve . . . 36
Figure 2-32: The Fill/Drain Assembly During System Filling . . . 37
Figure 2-33: Proper Expansion Tank Placement . . . . . 38
Figure 2-34: An Expansion Tank Without a Diaphragm as Fluid Pressure Increases . . . . . 39
Figure 2-35: An Expansion Tank With a Diaphragm as Fluid Pressure Increases . . . . . 39
Figure 2-36: Proper Backflow Preventer and Expansion Tank . . Placement. . . . . 41
Figure 2-37: Baseboard Tee with Coin Vent (top) and a Boiler . . Drain (Bottom. . . . . 42

Figure 2-38: An Automatic Air Vent . . . . . 42
Figure 2-39: A Manual Air Vent . . . . . 43
Figure 2-40: An Air Eliminator. . . . . 44
Figure 2-41: A Draindown System Using Three Solenoid Valves . 45
Figure 2-42: An Automatic Draindown Control Valve . . . . 45
Figure 2-43: A Vacuum Breaker . . . . . 46
Figure 2-44: A Manual Three-Way Valve . . . . . 47
Figure 2-45: Closed Cell, Fiberglass and Elastomer Insulation . 49
Figure 2-46: Storage Tank Insulation. . . . . 50
Figure 2-47: Various Thermistor Sensors . . . . . 51
Figure 2-48: A Pool System Collector Sensor . . . . . 52
Figure 2-49: A Typical Differential Thermostat Showing High Limit Adjustment Dial (left) and Switch (right) . . . . 53
Figure 2-50: Freeze Snap Switch Sensor . . . . . 54
Figure 2-51: Insertion Thermometers with PT Plugs . . . . 55
Figure 2-52: Thermometer with Instrument Well . . . . . 56
Figure 2-53: A Single Pressure Gauge for Measuring Pressure on Either Side of a Pump . . . . . 57
Figure 2-54: A BTU Meter System . . . . . 57

Figure 3-1 : Condensation on a Collector Glazing 63
Figure 3-2: Outgassed Material on a Collector Glazing . . . . 64
Figure 3-3: Collector Weep Hole Locations . . . . . 65
Figure 3-4: A Properly Grounded Collector . . . . . 67
Figure 3-5: An Automatic Air Vent . . . . . 68
Figure 3-6: A Manual Air Vent . . . . . 69
Figure 3-7: Poor Sensor Placement and Improper Insulation Coverage. . . . . 70
Figure 3-8: Shrunken Insulation Exposing Pipe . . . . . 72
Figure 3-9: Schrader Valve on a Diaphragm-Type Expansion Tank 75
Figure 3-10: Pump With a Pressure Gauge on Each Side. . . 76
Figure 3-11: Calibrated Gauges With the Pump Off and On . . 77
Figure 3-12: Gauges Out of Calibration With the Pump Off and On 78
Figure 3-13: A Single Pressure Gauge Capable of Measuring Both Pump Inlet and Outlet Pressure. . . . . 78
Figure 3-14: A Typical Pump Curve . . . . . 79
Figure 3-15: Dowfrost Test Kit . . . . . 84
Figure 3-16: Optical Refractometer . . . . . 84
Figure 3-17: Checking On/Off Operation by the Jumper Method 85
Figure 3-18: High Limit Dial and Control Switch on a Solar Control . . . . . 86
Figure 3-19: Checking High Limit Function With a Single Resistor 87
Figure 3-20: Solar Control Tester. . . . . 88

Figure 4-1: Checking On/Off Operation by the Jumper Method 115
Figure 4-2: High Limit Dial and Control Switch on a Solar Control . 116
Figure 4-3: Checking High Limit Function with a Single Resistor 116
Figure 4-4: Solar Control Tester. . . . . 118
Figure 4-5: An Airbound Collector Loop . . . . . 120
Figure 4-6: Using an Ammeter on a Solar Pump . . . . . 123
Figure 4-7: A Dowfrost Test Kit and a Dow Optical Refractometer . . . . . 128
Figure 4-8 Reverse Thermosiphoning in a Closed Loop System. . . . . 130
Figure 4-9: Correct Dip Tube Lengths in a "Four-Stud" Tank . 132

Figure 5-1: Carrying Glass Properly . . . . . 142
Figure 5-2: Typical Glazing Assembly . . . . . 143
Figure 5-3: Weep Hole Locations . . . . . 145
Figure 5-4: Misaligned Collectors . . . . . 146
Figure 5-5: Cutting Out the Leaking Collector. . . . . 148
Figure 5-6: Removing the Coupling Halves . . . . . 148
Figure 5-7: Rebrazing a Header/Riser Joint . . . . . 151
Figure 5-8: Repairing a Riser Leak. . . . . 151
Figure 5-9: A Properly Grounded Collector . . . . . 152
Figure 5-10: Collector Sensor Installation . . . . . 153
Figure 5-11: Inadequate Pipe Insulation . . . . . 155
Figure 5-12: Valve Installation . . . . . 157
Figure 5-13: A Recalibratable Pressure Gauge. . . . . 159
Figure 5-14: An Automatic Air Vent . . . . . 161
Figure 5-15: A Manual Air Vent . . . . . 162
Figure 5-16: Pump and Motor Mounts . . . . . 163
Figure 5-17: Bearings Lubricated by Oil. . . . . 164
Figure 5-18: Bearings Lubricated by Grease . . . . . 165
Figure 5-19: Packing-Type Seals. . . . . 166
Figure 5-20: Mechanical Seals . . . . . 167
Figure 5-21: Disassembling Pump Volute . . . . . 168
Figure 5-22: Grundfos Pump Shaft Plug. . . . . 169
Figure 5-23: Disassembling Taco Pumps . . . . . 170
Figure 5-24: Descaling a Heat Exchanger . . . . . 172
Figure 5-25: Plugging Tubes to Repair a Heat Exchanger . . 174
Figure 5-26: Fill/Drain Assembly (using check valve) . . . 177
Figure 5-27: Fill/Drain Assembly with Charging Pump and Filter. . . . . 179
Figure 5-28: Typical Charging Pump. . . . . 181

Figure 5-29: Special Fill/Drain Assembly Fittings . . . . . 182
Figure 5-30: Air Coming From the Drain Hose . . . . . 182
Figure 5-31: Correct and Incorrect Pouring from a 5 Gallon Drum without a Spout . . . . . 183
Figure 5-32: Routing Sensor Wires . . . . . 188
Figure 5-33: Installing a Sensor on a Tank Wall Stud . . . 194
Figure 5-34: Clamping the High Limit Sensor to Tank Outlet . . . 194

Figure 6-1: Condensation and Outgassing . . . . . 202
Figure 6-2: Resealing a Collector with Silicone Sealant . . . . . 204
Figure 6-3: Collector Weep Hole Locations . . . . . 205
Figure 6-4: Misaligned Collectors . . . . . 206
Figure 6-5: A Properly Grounded Collector . . . . . 207
Figure 6-6: Schrader Valve on a Diaphragm-type Expansion Tank.. . . . . 211
Figure 6-7: Sleeve Bearings Lubricated by Oil (left) and Ball Bearings Lubricated by Grease (right) . . . . 213
Figure 6-8: Checking On/Off Operation by the Jumper Method. 217
Figure 6-9: Checking High Limit Function with a Single Resistor 218
Figure 6-10: Solar Control Tester. . . . . 219

Figure A-1 Closed-loop System . . . . . A-2
Figure A-2 Drainback System . . . . . A-2
Figure A-3: Draindown System . . . . . A-3
Figure A-4: Direct Pool System . . . . . A-3
Figure A-5: Absorption Cooling System A-4
Figure B-1 : Collector Tilt Measured from the Horizontal on Level and Tilted Surfaces . . . . . B-4
Figure B-2: Isogonic Map of the United States . . . . . B-5
Figure B-3: Magnetic Variation on a Compass . . . . . B-5
Figure B-4: Collector Orientation . . . . . B-6

LIST OF TABLES

Table 2-1: Pump Application Guide . . . . . 24
Table 2-2: Typical Solar Pipe Insulations . . . . . 48
Table 2-3: Control Features and System Types. . . . . 54

Table 3-1: Current Readings and Pump Problems.. . . . . 80
Table 3-2: Characteristics of Available Controls . . . . . 87
Table 3-3: Temperature vs. Resistance in Ohms for 10K Sensors 91
Table 3-4: Temperature vs. Resistance in Ohms for 3K Sensors 92

Table 4-1: Temperature vs. Resistance in Ohms for 10K Sensors 113
Table 4-2: Temperature vs. Resistance in Ohms for 3K Sensors 114
Table 4-3: Resistance and Color Codes for Typical High Limit Situations . . . . . 117
Table 4-4: Characteristics of Currently Available Controls . . . 119
Table 4-5: Current Readings and Pump Problems . . . . . 124
Table 4-6: Flow Estimates from Temperature Changes . . . 126

Table 5-1: Typical Repair/Replace Choices . . . . . 138
Table 5-2: Repairability of Various Absorbers Manufactured for Use by Others . . . . . 149
Table 5-3: Repairability of Various Absorbers Manufactured by Collector Manufacturers . . . . . 150
Table 5-4: Component Fluid Capacities . . . . . 185
Table 5-5: Fluid Pressure for Closed Loops . . . . . 187

Table B-1: Suggested Flow Rates for Solar Applications . . . B-2
Table B-2: Flow Rates for Various Copper Tubing Sizes . . B-3
Table B-3: Solar Collector Tilt Angles . . . . . B-4
Table C-1: Recommended Tool List . . . . . C-2
Table C-2: Recommended Material List . . . . . C-3
Table C-3: Recommended Spare Parts List. . . . . C-5

# 1.0
# INTRODUCTION

What You Will Find in This Chapter

This chapter presents the purpose, scope and structure of the manual. Also, recommended ways to use the manual are described.

Please read this chapter carefully; it will enable you to effectively use this manual in solar heating system operation, inspection, troubleshooting, repair and maintenance activities.

## 1.1 PURPOSE OF THIS MANUAL

This manual provides information on the operation, inspection, troubleshooting, repair and maintenance of liquid solar heating systems. That is, solar heating or cooling systems using liquid, rather than air, in the solar collectors to gather heat, pumps to move it and tanks of water to store it. Solar electric (photovoltaic) systems which generate electricity directly from solar energy are addressed in their own manual.

We assume the reader is confronted with an existing system, and wants an answer to one of the following questions:

- How does it work? (Operation)
- Is it working? (Inspection)
- What's wrong with it? (Troubleshooting)
- How do I fix it? (Repair)
- How do I keep it working? (Maintenance)

NOTE

This manual is designed to be used in the field by staff performing the actual inspection, maintenance or repair of solar systems. Do not let it collect dust on a shelf!

The physical structure of the manual has been designed for easy copying. Many pages are sample worksheets and forms that must be copied to be used with the recommended procedures.

## 1.2 SCOPE OF THIS MANUAL

The manual covers service issues for systems using flat-plate, evacuated tube, or unglazed (pool) solar collectors.

It examines four loads that can be met by solar heating. These are domestic and process hot water, space heating, space cooling and swimming pool heating. These four applications represent the vast majority of Navy solar systems. They also offer the reader a fairly broad look at the types of interconnections between solar systems and loads.

Chapters of this manual are:

Chapter 2 - Operation
Chapter 3 - Inspection
Chapter 4 - Troubleshooting
Chapter 5 - Repair
Chapter 6 - Preventative Maintenance

System design is not specifically addressed. However, it cannot be completely ignored. If the system design is inadequate or incorrect, it will affect system operation and maintenance.

For this reason, Appendices A and B include “generic” system designs and sizing guidelines. These are based on ongoing efforts by military and civilian authorities to standardize the layout and sizing of components in solar systems. Hopefully, this will simplify the operation and maintenance of solar systems installed or rehabilitated in the future.

The information in Appendices A and B assists the service staff to determine when performance problems are actually caused by design errors. These Appendices show correct system designs, but they are not meant to replace a design guide.

## 1.3 HOW TO USE THIS MANUAL

**1.3.1 Review of Manual Structure,** You will be asked to flip back and forth through the manual to familiarize yourself with the location of the different sections.

Take time to actually look at the pages being described. A good understanding of the structure of the manual will make it more useful to you.

**1.3.2 Worksheets,** Most chapters feature worksheets near their ends. They are designed to be copied and used for the solar system being serviced.

The' worksheets can be "customized" for your particular needs and preferences. Where they are not appropriate for the specific system under service, modify the worksheet to meet your needs.

It is recommended that the completed worksheets be three-hole punched and inserted into a loose-leaf notebook. The notebook becomes a permanent service history of the solar heating system.

**1.3.3 Self-Study Questions,** At the end of each chapter, questions for self-study are printed. The answers to all the questions appear at the very end of the manual in Appendix F.

The questions can be used to confirm your understanding of the material in the chapter, or as part of a more formal training program.

**1.3.4 Appendices.** The manual contains six Appendices. Appendices A and B present Generic System Designs and Design Guidelines respectively. Although not a complete solar design manual, these Appendices can be used to determine when system problems are actually caused by design errors.

Valuable information on tools, spare parts and parts suppliers is contained in Appendices C and D. Appendix E is a chart detailing which materials and fluids are compatible. Appendix F is the answers to all the self-study questions at the end of the chapters. You should scan these Appendices to learn what types of information they contain, and use them as a reference when needed.

**1.3.5 Notes, Cautions and Warnings.** Boxes containing notes, cautions and warnings appear throughout the manual. Their purpose is to alert you to an important aspect of the topic being discussed.

NOTES provide helpful information that does not otherwise fit into the text.

CAUTIONS draw attention to the possibility of equipment damage if the instructions are not followed.

WARNINGS draw attention to the possibility of personal injury if the instructions are not followed.

**1.3.6 Chapter and Page Format** A three-point system is used on every page to let you know where you are in the manual. First, a footer at the bottom "outside" of every page shows the chapter title. On this page it is "INTRODUCTION."

The second point is a footer below the chapter title with the section number and title. For example, "1.3 HOW TO USE THIS MANUAL" on this page.

Finally, page numbers, continuous throughout the manual, are at the bottom center of every page.

Smaller illustrations are placed on the same page as corresponding text. Full-page illustrations are on the facing page, with captions centered below the illustration. The same three-point orientation system is used on full-page illustrations.

Illustrations and tables are numbered consecutively through each chapter. A list of figures and tables is presented just after the table of contents near the front of the manual.

Each chapter begins with an introductory section. This describes the content of each chapter. It may point out what is not in that chapter, and where to find it.

Many chapter introductions include information you may need to understand the rest of the chapter. Therefore, we suggest you read the chapter introduction before reading other parts of the chapter.

# 2.0
# 0PERATION

What You Will Find in This Chapter:

This chapter contains information on the configuration and operation of the most common types of solar heating systems. The purpose and operation of individual components is described.

In the rest of the manual, active solar heating systems are referred to as “solar systems” for convenience.

## 2.1 BASIC SYSTEM CONFIGURATION

**2.1.1 Definition of Loops.** Frequent reference is made to different piping “loops.” As an example, the collector loop is the piping system that connects single or multiple solar collectors to the remainder of the solar heating system.

Generally a piping loop involves a flow of fluid caused by a pump or water pressure. Most loops eventually bring the fluid back to its starting point, although some allow fluid to enter and exit the loop at various points (Figure 2-l).

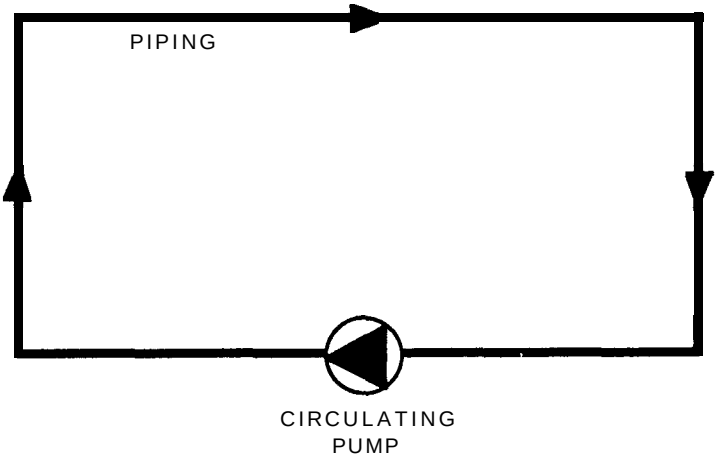


FIGURE 2-l
A Piping Loop

Non-solar loops you may be familiar with are hydronic heating baseboard loops. This would be considered a closed loop. Except for small amounts of make-up water, the fluid in the loop never changes, and is rarely exposed to air.

A recirculating DHW system is an example of an open loop. The water changes on a regular basis, with fresh city water coming in whenever a fixture is opened. This fresh water brings in fresh oxygen. At the same time, the exiting water is exposed to air (Figure 2-2).

FIGURE 2-2
A Recirculating DHW System

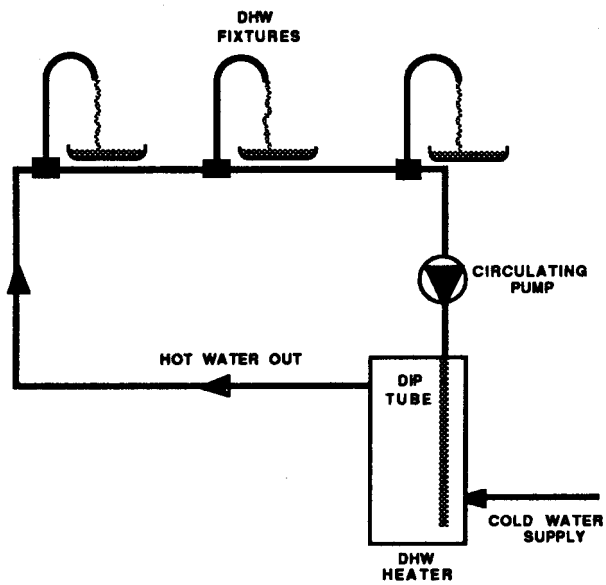


**2.1.2 Common Components.** Almost all active, liquid, solar heating systems include certain components. These are:

- o Solar collectors
- o Circulation pumps and piping
- o Storage
- o Controls and sensors
- o Some method of freeze protection

A simplified solar heating system is shown in Figure 2-3. Heat energy from the sun enters, and is trapped by, the solar collectors. These are usually mounted on the roof, or near the building.

Inside the collector is an absorber to which are attached tubes filled with liquid. A pump circulates this fluid through the absorber removing the trapped heat to a solar storage tank.

Water is normally used for storage, because it can be used for many purposes and it stores a large amount of heat in a fairly small volume.

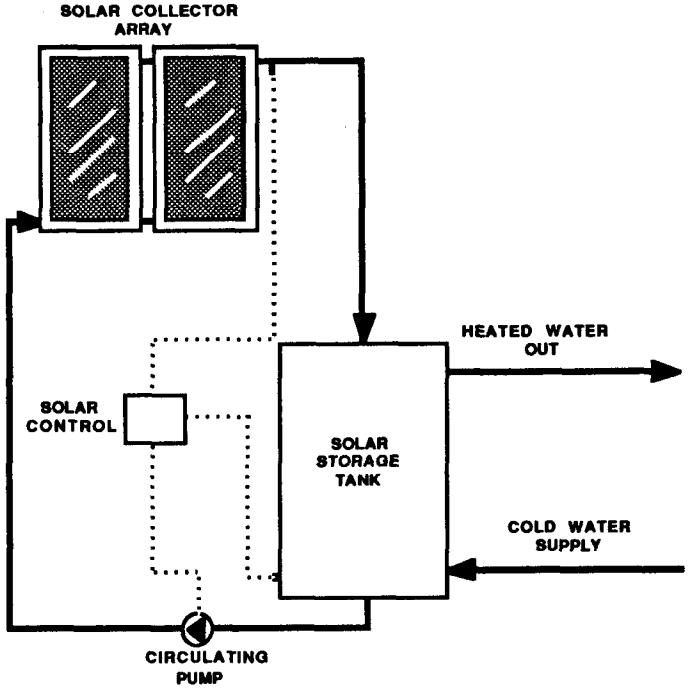


FIGURE 2-3
A Simplified Solar System

The collectors and exposed piping require protection against freezing in cold climates. If water is used to remove the heat from the collectors, it must be drained on cold nights or cold, cloudy days to prevent it from freezing. Two ways to do this are called “drainback” and “draindown.” These are described in more detail in Sections 2.3 and 2.4.

In other systems, a non-freezing fluid is used in the collector loop. In this case, a heat exchanger must be used to transfer the heat from the collector fluid to the water in storage. This type of system is called “closed-loop,” and is described in Section 2.2.

All the different types of systems use the same type of control. The control uses two sensors. One sensor is installed at the collectors, and the other is located at the storage. The control continually compares the temperature of the two sensors.

Whenever the collectors are warmer than the storage, the control turns on the pump to gather solar energy. If the collectors are cooler than storage, the pumps remain off. Predetermined temperature differences, called differentials, are chosen by the system designer.

All solar heating systems share other characteristics. For example, collector piping should always deliver cool liquid to the bottom of the collectors. The heated fluid should be removed from the top. This takes advantage of the natural inclination of the warmed liquid to rise.

Most collector piping is designed to flow through multiple collectors in parallel, rather than one after the other in series. Because solar collectors operate at relatively low temperatures, this method allows them to operate as efficiently as possible.

Finally, piping delivers and picks up fluid from diagonally opposite corners of a group of collectors, to be sure the liquid flows evenly through all the collectors (Figure 2-4).

FIGURE 2-4
A Properly Piped Flat-Plate Collector Array.

Most collectors have the four ports as shown, to simplify correct piping.

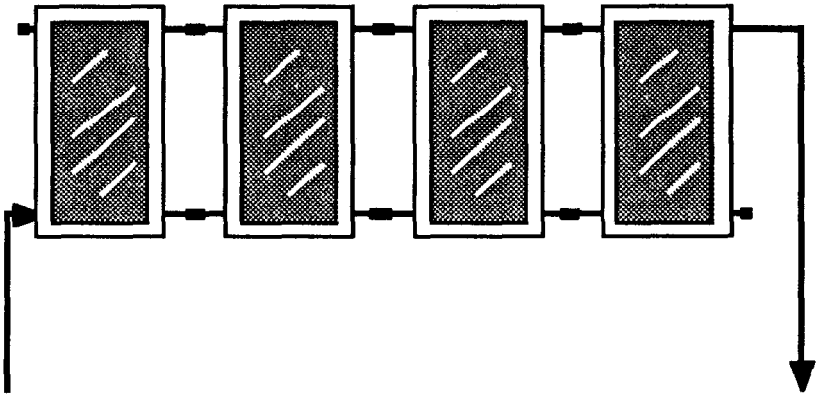

**2.1.3 Common Load Connections.** The most common uses ("loads") for the energy stored in the storage tank are for domestic hot water (DHW), process water heating, space heating, space cooling and swimming pool heating.

Domestic Hot Water

In DHW applications, the storage tank is usually installed in the cold water supply. The cold supply is "pre-heated" with solar energy before a standard, "back-up" or "auxiliary," water heating system receives it. If the solar system supplies adequate heat, the auxiliary system remains off. If the solar system cannot supply the

required heated water, the auxiliary system boosts the water temperature the rest of the way up to the desired temperature (Figure 2-5).

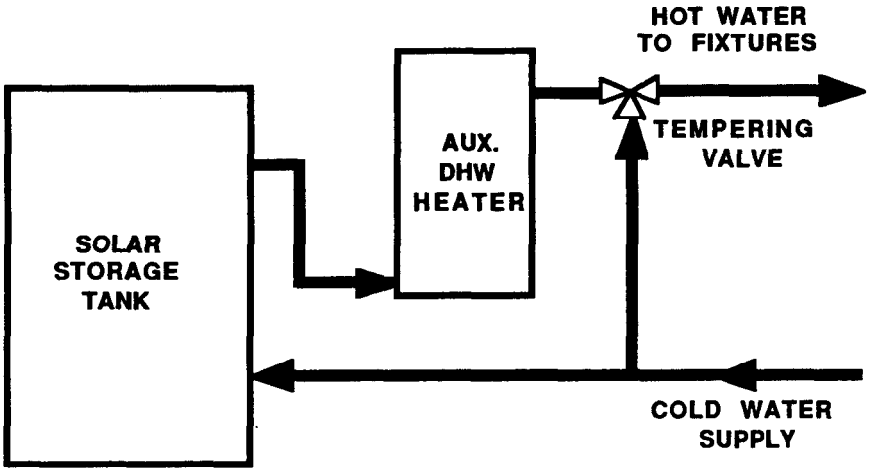


FIGURE 2-5
Solar Storage Tank in Series With DHW Auxiliary Heater

In either case, no other controls or valves are needed. The solar DHW preheating system in series with an auxiliary heater is the most common solar heating application. The cold water supply is almost always lower in temperature than the solar storage tank, so solar energy can almost always be utilized.

## Process Water Heating

Process water heating with solar systems is almost identical to domestic water heating. One difference is the larger size of the system. If the process requires high temperature water, evacuated tube collectors, which operate more efficiently at high temperatures, may be used.

Some systems use no storage, but add the solar heat to the water as it is brought in. This approach is most common when the solar system is fairly small compared to the size of the load.

Space Heating

The two basic types of "traditional" space heating systems are:

- o Air
- o Water (hydronic).

In forced air heating systems, the air entering the heating system (the return air) is at room temperature. When the solar heated water is warmer than this return air, solar heat is introduced. A duct coil is used to transfer the solar heat into the return air before it enters the heating system.

If solar energy alone is sufficient to maintain the room at the thermostat setpoint, the auxiliary system remains off. If the room temperature continues to drop, the auxiliary system boosts the air up to a higher temperature. The auxiliary system can be a gas or oil burner, or electric coils.

Even when the auxiliary system is on, the solar coil can still preheat the return air, as long as the water temperature is higher than the return air temperature.

A two-stage thermostat usually controls the two heat sources. Stage one (the pump delivering solar-heated water) is usually allowed to stay on when stage two (the back-up heater) comes on (Figure 2-6).

FIGURE 2-6
A Forced Air Heating System

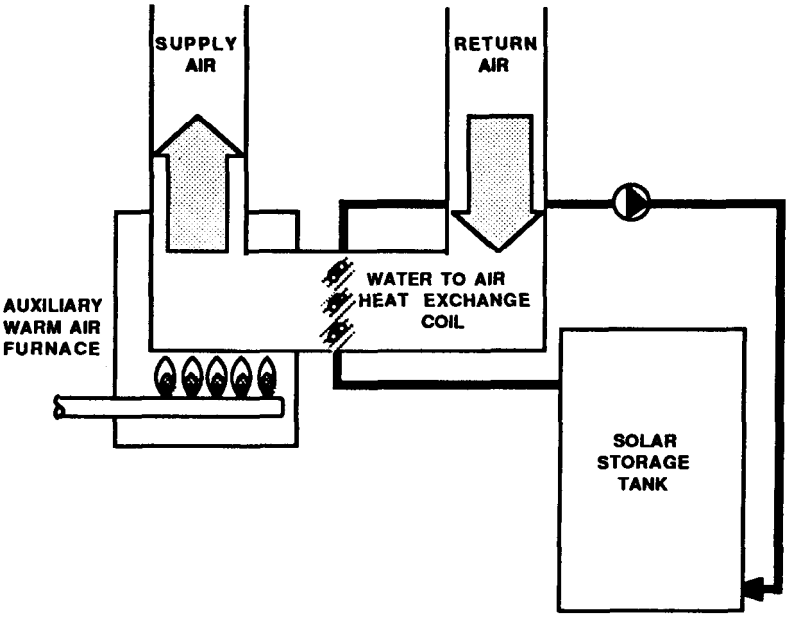

When a typical boiler is running in hydronic systems, the water returning from space heaters (AHU, unit heaters, baseboard elements, radiators or others) may be warmer than the water in the solar storage tank. For this reason, the solar tank and the auxiliary boiler are installed in parallel.

The solar tank is given the first chance to meet the heating load. If it cannot maintain the desired temperature, the water flow is diverted through the auxiliary boiler. Solar energy is not used for preheating, and the two systems perform independently (Figure 2-7).

Again, a two stage thermostat is used, but stage one is cut off whenever stage two comes on (Figure 2-7).

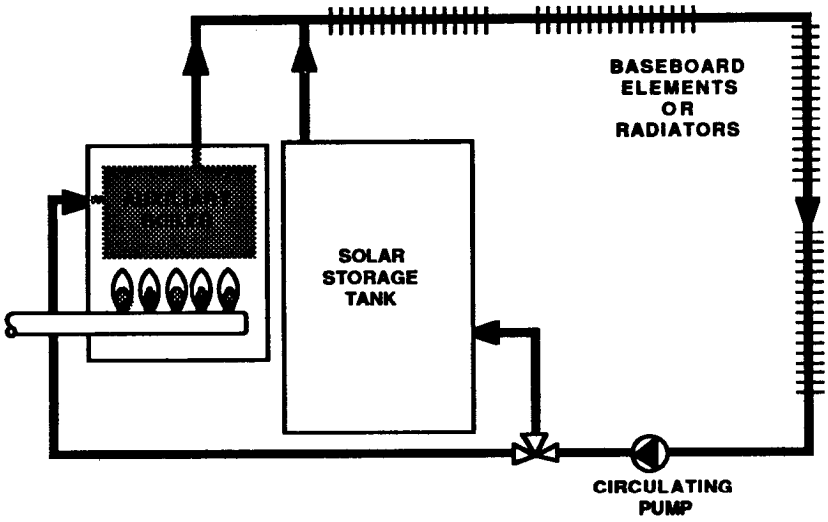


FIGURE 2-7
A Hydronic Heating System

Space Cooling

Solar heat is used for space cooling with, absorption chillers. These chillers use heat energy to drive the refrigeration cycle, rather than electrical or mechanical energy. These systems require fairly high temperatures (160°F-200°F), so they use either very efficient flat-plate or evacuated tube collectors.

In a solar cooling system, the solar tank and the auxiliary boiler are installed in parallel. This is because when the auxiliary boiler is operating, the water returning from the generator is almost always warmer than the water in the solar storage tank.

The solar tank is given the first chance to meet the cooling load. If it is not at a high enough temperature, the water returning from the generator is diverted through the auxiliary boiler instead. Solar energy is not used for preheating, and the two systems are completely independent.

Another way to provide back-up is to install a mechanical or electrical chiller, in parallel with the solar absorption chilling unit. In this case, an auxiliary boiler is not used in the loop with the absorption chiller (Figure 2-8).

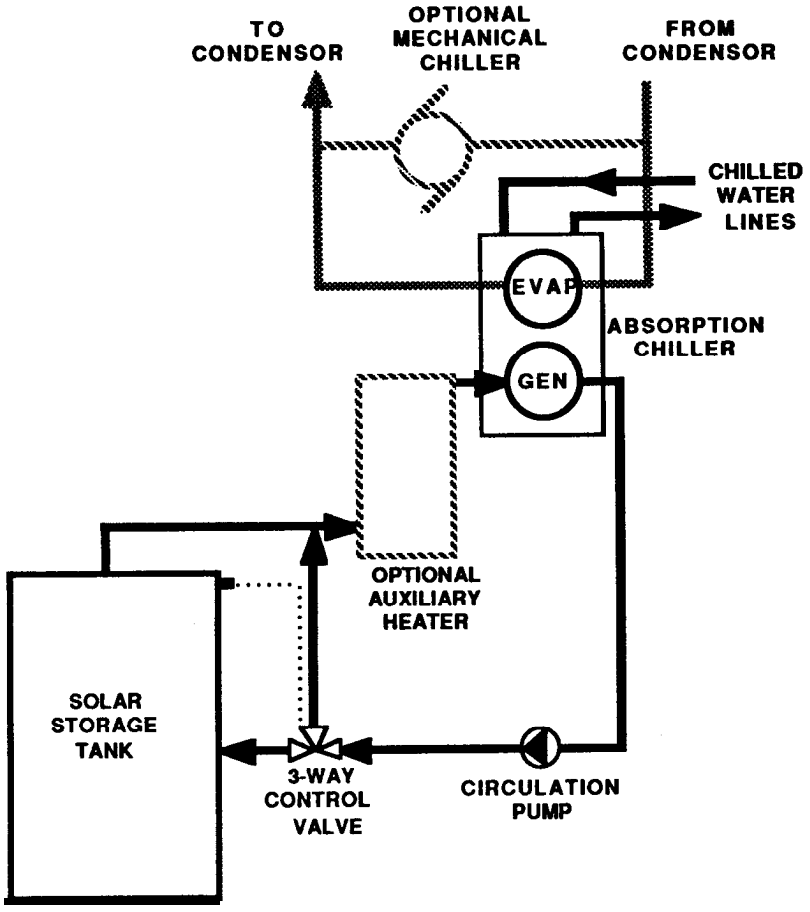


FIGURE 2-8
An Absorption Cooling System

Notice that both types of back-up are pictured, but only one is normally used.

## Swimming Pool Heating

In pool heating, the pool itself functions as the storage medium (Figure 2-9). If the pool is outside, it is normally not used during the winter. During the summer months there is a relatively small temperature difference between the pool and the air around it.

This allows the solar collectors to be very simple. Plastic, rubber or metal absorbers are secured to a roof or rack. No insulation, frame or glazing is necessary.

Pool water flows either directly through the collectors or through a heat exchanger in the solar loop. After solar heat is added, an auxiliary heater may be used to further boost the water temperature.

The pool filter pump is normally set to run during the daylight hours. When the solar control decides the collectors are warmer than the pool water, a valve system diverts pool water through the collectors.

Indoor pools used throughout the entire year typically use an indirect system. The collectors are standard glazed flat-plate units, and usually a non-freezing fluid is used in the collector loop. A heat exchanger, with stainless steel or copper-nickel passages for the pool water, transfers the solar heat into the pool.

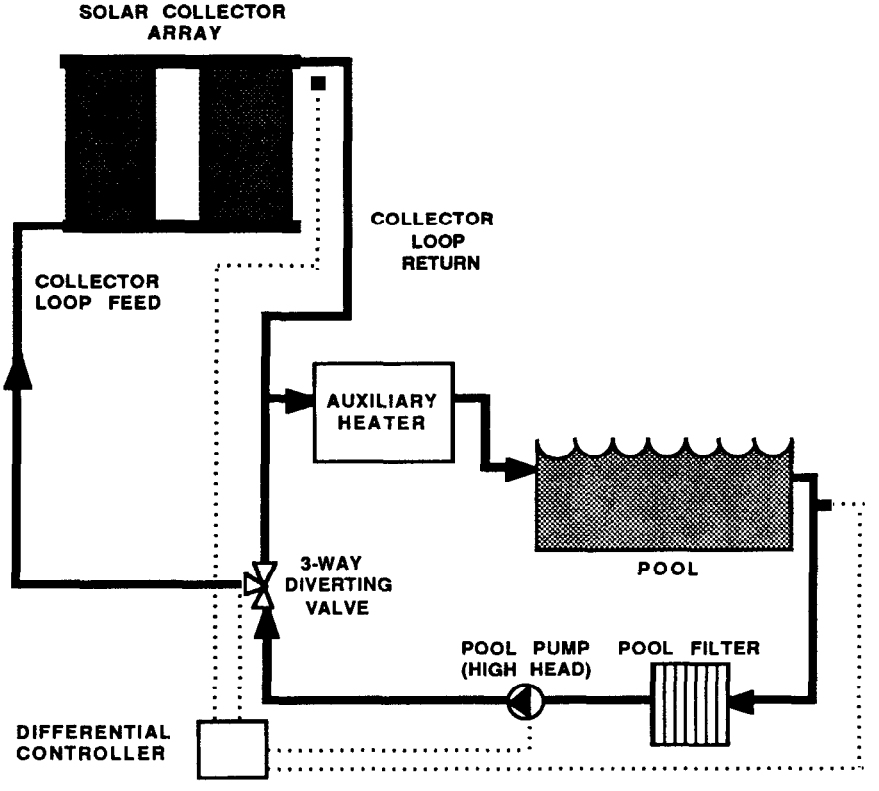


FIGURE 2-9
A Pool Heating System

## 2.2 BASIC CONFIGURATION OF CLOSED-LOOP SYSTEMS

Closed-loop systems use a relatively small pump to move a non-freezing fluid between the solar collectors and a heat exchanger. The heat exchanger, installed in a heated space, transfers the heat from the non-freezing fluid to water.

This water is circulated between the heat exchanger and the storage tank by another relatively small pump. The heat exchanger, pumps and storage tank are all normally installed in a heated space.

Pumps in a closed-loop system are relatively small because the piping loops they serve are completely filled. Looking at the collector loop in Figure 2-10, you can see that, like a siphon, the fluid falling down the return line will pull fluid up the feed line.

Put another way, the energy required to push fluid to the top of the collectors is offset by gravity pulling it down the other side. The only energy the pump must supply is that necessary to overcome the resistance due to the friction in the piping.

FIGURE 2-10
Fluid in a Loop.

The fluid falling down the return line acts to pull up the fluid in the feed line. This works as long as the loop is completely filled.

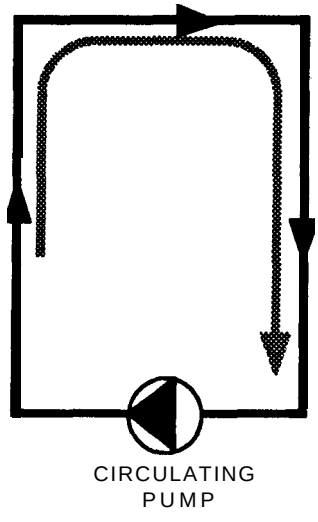


The pump moving the non-freezing solar fluid must be fitted with special seals and gaskets compatible with the fluid being used. Heat exchanger gaskets and valve seals must also be chosen carefully. Appendix E shows which materials are appropriate for various fluids.

The pump circulating water must be of bronze or stainless steel construction, to avoid corrosion and eventual leakage. The water tubes inside the heat exchanger must also be made of materials appropriate for water, usually copper or brass.

Closed-loop systems require several special components. (Figure 2-11) One of these is an expansion tank in the collector loop, to compensate for the expansion and contraction of the solar fluid as it is heated and cooled.

Another special component is a check valve. When the fluid in the collectors is cold (usually on winter nights), it becomes more dense and drops to the bottom of the collector loop. Warmer solar fluid from inside the building rises to the top of the collectors.

Eventually, all the solar fluid is slowly flowing in reverse through the system. This chilling process can start another similar flow in the water loop between the heat exchanger and the storage tank. The final result is that heat from the storage tank escapes through the solar collectors to the outside. The check valve prevents this "reverse thermosiphoning."

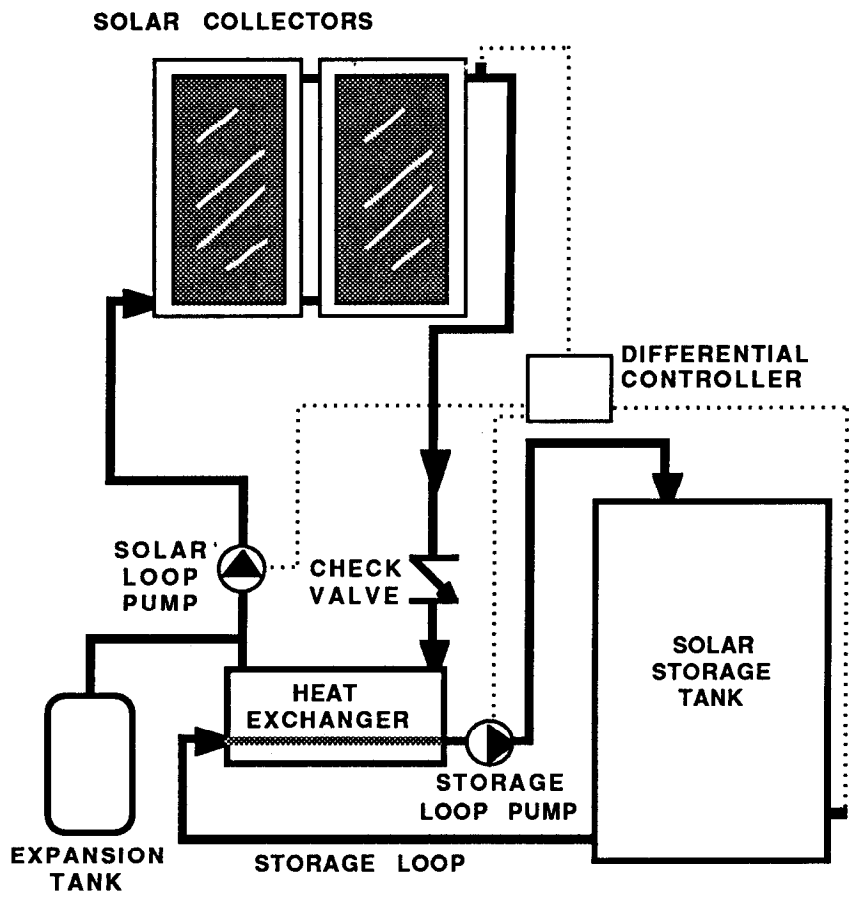


FIGURE 2-11
A Closed-Loop Solar Heating System

Finally, closed-loop systems require a fill/drain assembly to allow adding the solar fluid while removing air. Normally, this assembly consists of two boiler drains (or hose adapters with shutoff valves) on each side of a shutoff valve. In many cases, the check valve is used between the fill/drain ports in place of a shutoff valve.

Because collectors in a closed-loop system do not need to drain themselves on a regular basis, the location of the collectors relative to the rest of the system is not critical. Compare this to other types of systems, where the location of the collector is critical to proper system performance.

## 2.3 BASIC CONFIGURATION OF DRAINBACK SYSTEMS

Drainback systems use water as the collector fluid. The collectors and exposed piping must be installed so proper draining is possible to avoid freezing.

Looking at Figure 2-12, you can see how the water from the collectors drains back into a reservoir tank whenever the solar loop pump is turned off. The reservoir tank is large enough to accept the volume of water held in the collectors and exposed piping.

When solar energy is available for collection, the solar loop pump pushes water up the system to the top of the collectors, where it drops back into the reservoir to be pumped back up again.

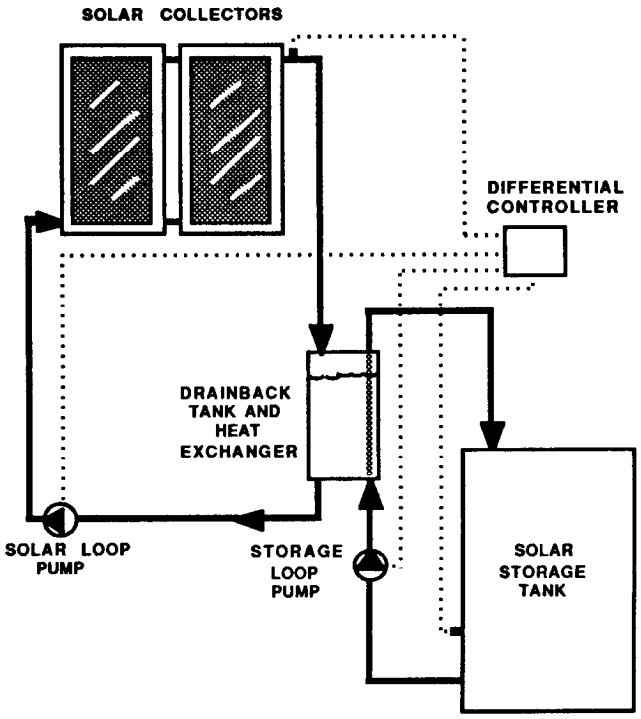


FIGURE 2-12
A Drainback Solar Heating System

A heat exchanger either inside or outside of the reservoir tank transfers the heat from the solar loop water and into storage water, that is pumped in and out of the storage tank.

While this system appears to be similar to a closed-loop system, there are two important differences. First, the solar loop fluid is water, and must be drained during freezing conditions. This means the collectors and all exposed piping must be above the drainback reservoir tank and pump. Also, the collectors and piping must be sloped for drainage.

Second, the solar loop water is not under pressure. This means it does not require a fill/drain assembly, expansion tank or check valve. However, because the loop is not always completely filled, the pump must be large enough to overcome not only friction, but gravity as well when filling the collectors.

## 2.4 BASIC CONFIGURATION OF DRAINDOWN SYSTEMS

A third method allows the storage water (under street pressure) to enter the solar collectors and piping. When solar energy is available, a pump circulates the water through the system to move heat into storage.

In a draindown solar system, the collector loop is filled by water pressure whenever the pump needs to run. This means the pump is not working against gravity, and can be relatively small. (Figure 2-13)

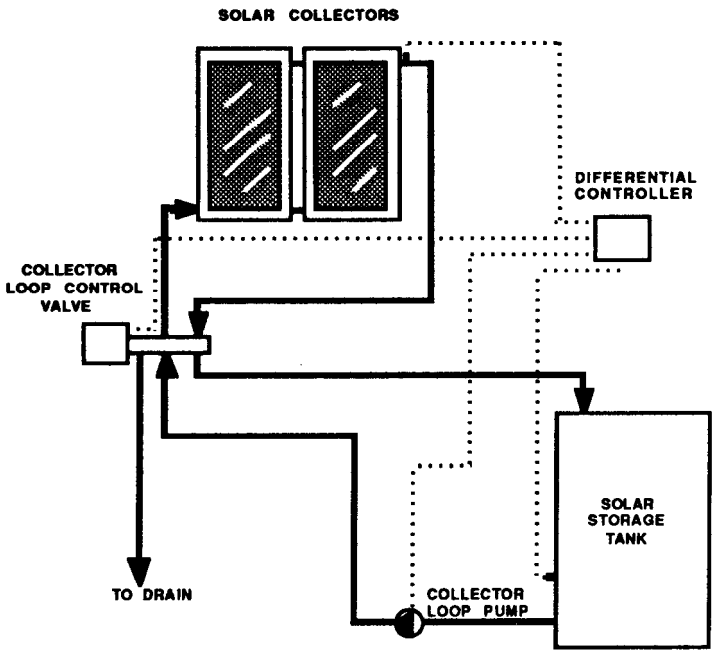


FIGURE 2-13
A Draindown Solar Heating System

When freezing conditions are encountered, a control valve in the collector loop shuts off the water pressure to the collectors and exposed piping. The valve allows the water in the collectors to escape to a drain. In larger systems, three or more solenoid valves replace the single control valve used for residential applications.

Currently available collector loop control valves are typically not reliable. If water is left in the collectors during freezing conditions, they will probably be ruined. For this reason, draindown systems are not known for their high reliability in climates with frequent freezes.

## 2.5 BASIC CONFIGURATION OF THERMOSIPHON SYSTEMS

If solar collectors are filled with water and exposed to the sun, the water will heat up, become less dense, and try to rise. If the outlet of the collectors goes up to a storage tank, the heated water can flow up into the top of the tank.

If the cooler bottom of the tank is piped back to the inlet of the collectors, a flow of water will start. This “thermal siphon” can move enough water through the collectors to heat the contents of a properly sized storage tank. (Figure 2-14)

This system is called a "thermosiphon” system. The collectors, piping and tank are all outside and filled with water. Heat losses can be significant, and the potential for freezing exists. For this reason, this system is used only in areas which rarely have

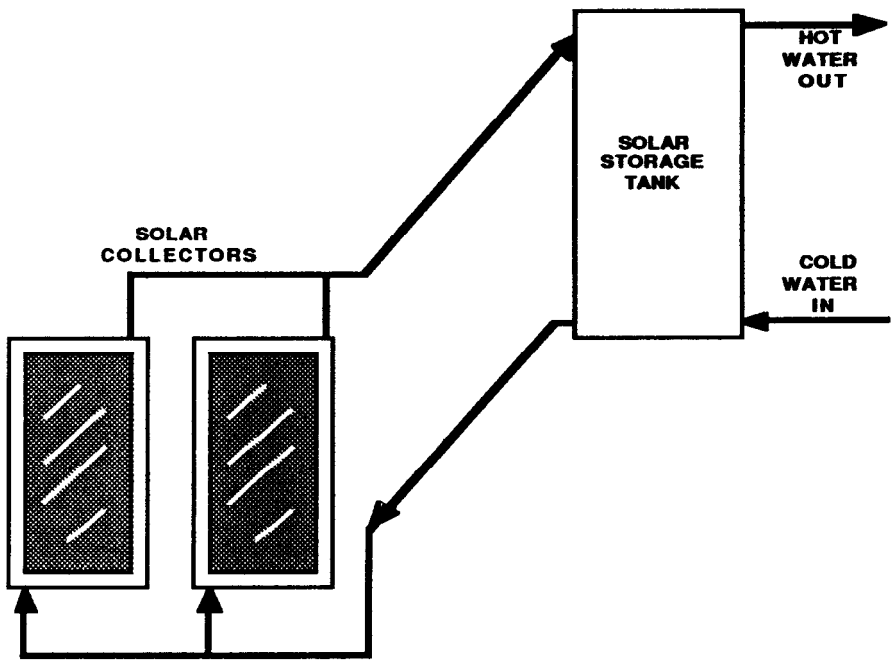


FIGURE 2-14
A Thermosiphon System

freezing temperatures, or during the summer months. If used only in summer, the system is drained in the fall.

The heated water is usually for domestic hot water as described in Section 2.1.3.

## 2.6 BASIC CONFIGURATION OF INTEGRATED COLLECTOR-STORAGE SYSTEM

Another system appropriate only for areas or seasons without freezing temperatures is the integrated collector-storage system. These are sometimes called “ICS” systems or “breadbox” solar water heaters.

The collector and storage are all in one unit. Typically, an uninsulated storage tank is enclosed in a well-insulated box with one glazed side. (Figure 2-15)

The sun strikes and warms the tank and water. The heated water is usually used to preheat domestic hot water as described in Section 2.1.3.

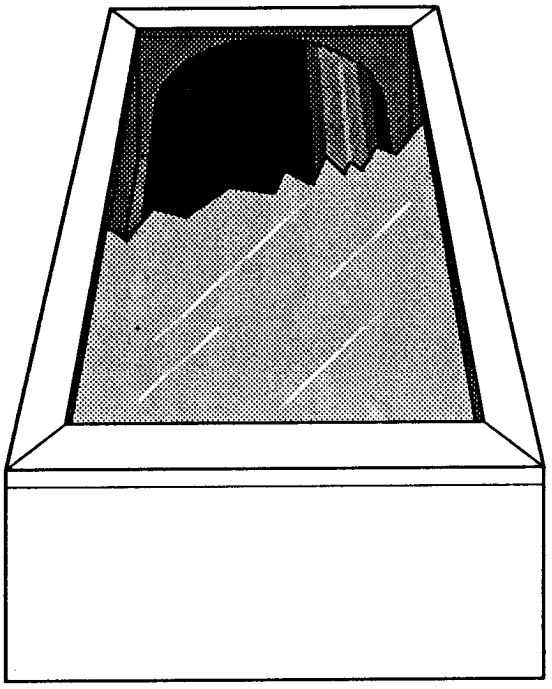

FIGURE 2-15
An ICS System

## 2.7 COMPONENT OPERATION

2.7.1 Solar Collectors. Because of the effects of the earth's atmosphere, three ways exist for solar energy to arrive at the solar collectors. The first way is straight through the atmosphere. On the average, 27% of the amount that was available above the atmosphere arrives by this method. Because it travels directly to the surface, this energy is called "direct" or "beam" radiation. (Figure 2-16)

The second type of solar energy at the earth's surface is called "diffuse" or "scattered" radiation. This energy travels in a series of collisions with dust, water vapor and other particles in the atmosphere before arriving at the surface. This represents about 16% of the amount available above the atmosphere. Finally, solar energy reflected from the surface of the earth is sometimes available, averaging 5% of what was available. The rest is absorbed or "reflected" by the atmosphere, and is unavailable for collection.

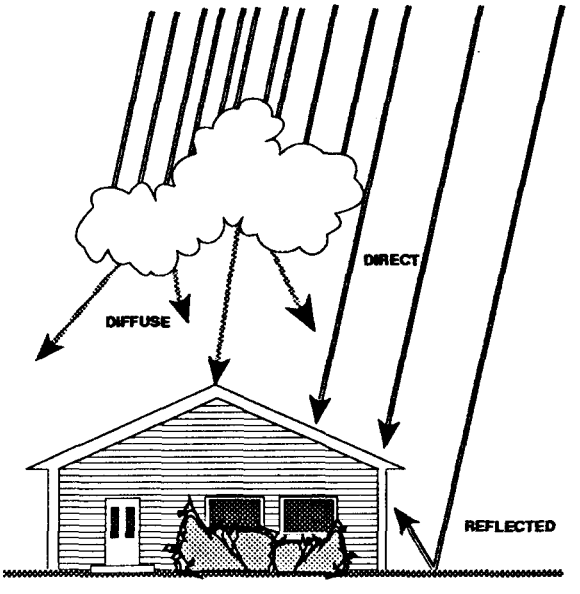


FIGURE 2-16
Direct, Diffuse and Reflected Solar Radiation

Flat-plate and evacuated tube solar collectors can collect all components of the sun's energy. Of the two, flat-plate types are the most-used type of collectors.

The typical "liquid-cooled" flat-plate collector consists of a black absorber plate with tubes running through or attached to it to take the collected heat away. Above this surface is a glazing, usually glass, to help trap the heat. A frame holds the entire package together, and usually includes some provision for mounting. Insulation surrounds the absorber to retard the loss of heat from the collector. (Figure 2-17)

Flat-plate and evacuated tube collectors operate by the “greenhouse effect.” As seen in Figure 2-17, the heat energy from the sun is in short waves, which make their way easily through the molecules of the glazing material. Once inside they strike, and are absorbed by, the black absorber plate. Fluid flowing through the absorber passageways carries the heat away.

Heat energy attempting to re-radiate from the absorber does so in much longer waves than the original incoming energy, and does not move back out through the glazing. In addition, most absorbers are coated with a “selective” surface which absorbs large percentages of available heat, and re-radiates small amounts.

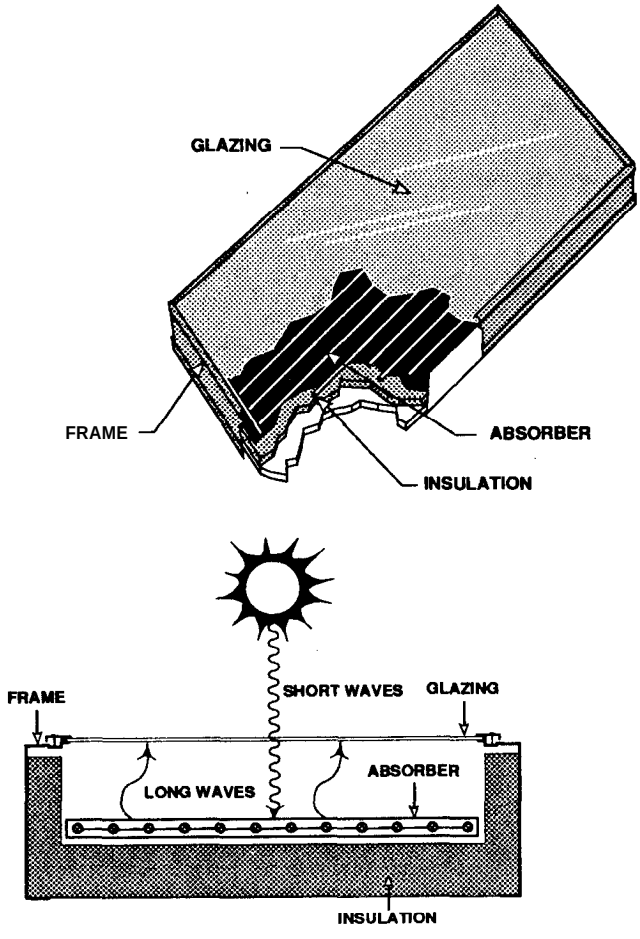


FIGURE 2-17
A Typical Flat-plate
Solar Collector

Evacuated tube collectors further reduce heat loss by surrounding the hot absorber with a vacuum. This eliminates heat loss by convection (heat movement involving the warming and lifting of a gas or liquid). The vacuum serves as the insulation. The glass tube functions as the frame and the glazing.

The vacuum tubes used are either single wall or double wall. Single wall tubes are built with a small absorber plate in the vacuum. Double wall tubes are similar to thermos bottles, with the vacuum between the two tube walls. The absorber inside the inner tube is not in a vacuum. (Figure 2-18)

Most evacuated tube collectors are made up of several tubes spaced apart to reduce the total collector cost. To catch solar energy which falls between the tubes, polished metal reflectors are used to direct solar energy into the back sides of the tubes.

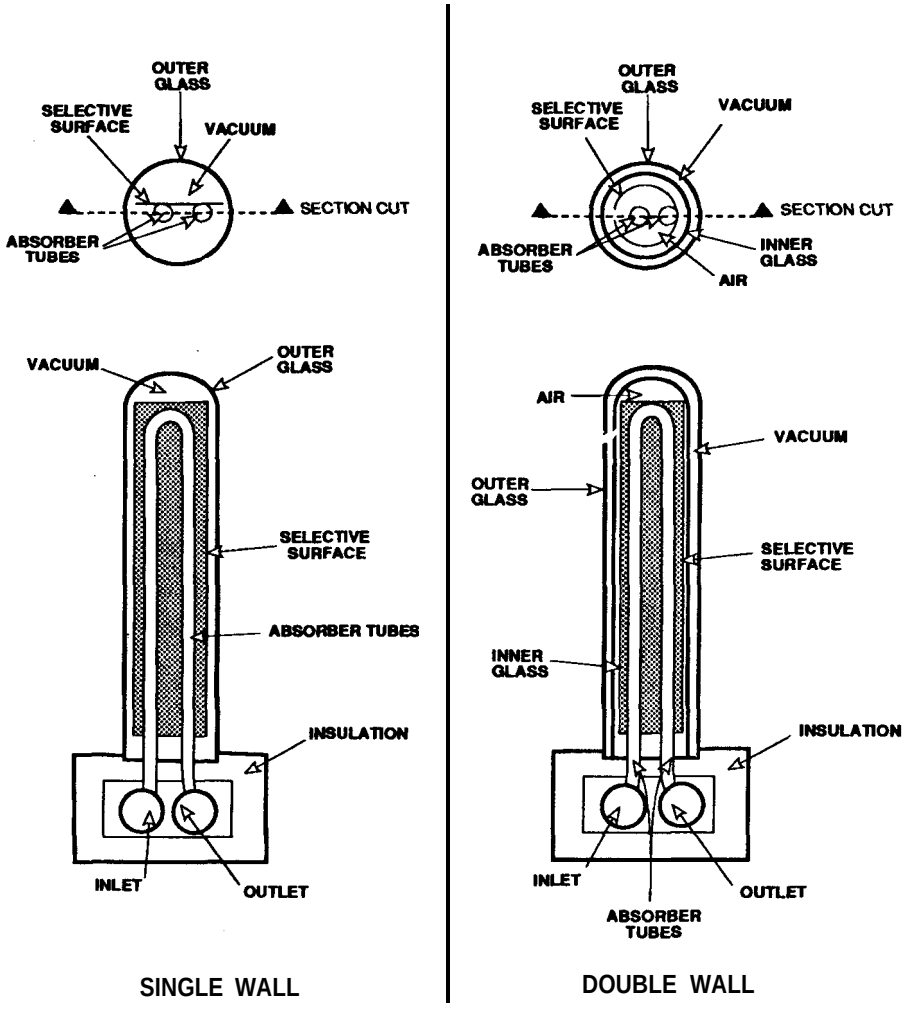


FIGURE 2-18
Single and Double Wall Evacuated Tube Collectors

## Pool Collectors

Collectors used for heating swimming pool water operate at relatively low temperatures during fairly warm times of the year. Consequently, the heat loss from the collector will not be great under these conditions.

For this reason, they are nothing but a plastic or metal absorber plate. No frame, insulation or glazing is used. (Figure 2-1 9)

Indoor pools used throughout the entire year typically use an indirect system. The collectors are standard glazed flat-plate units with metal absorbers.

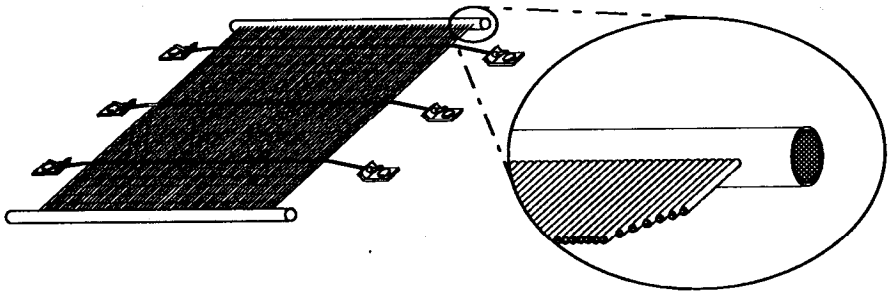

FIGURE 2-19
An Unglazed Pool Heating Solar Collector

**2.7.2 Pumps.** The wetted components of pumps used for moving water are normally constructed from bronze or stainless steel. These materials do not deteriorate in water, do not contaminate the water and are compatible with the other piping system materials normally used. No special seals or gaskets are required.

Pump components in contact with non-freezing solar fluids are normally made of cast iron or steel. Special gaskets and seals are always required. See Appendix E for a listing of fluids and materials compatibility. (Table 2-1)

For applications requiring a small (1/35 to 1/2 hp) circulating pump, the typical unit is a “wet rotor” type. (Figure 2-20) The moving part of the pump motor, the rotor, is surrounded by water. During operation, part of the water being pumped acts as a lubricant and coolant for the motor. Wet rotor pumps require no other lubrication or maintenance, other than periodic inspection.

Larger systems may use a number of small wet rotor pumps ganged together, but the usual choice is one large pump of traditional design. (Figure 2-21) Because the motor and pump are physically separated, periodic lubrication is usually required, and inspection procedures include checking for shaft alignment and bearing wear.

FIGURE 2-20
Wet Rotor Circulating Pumps: Cartridge-Type (left) and Magnetic Drive-Type (right).

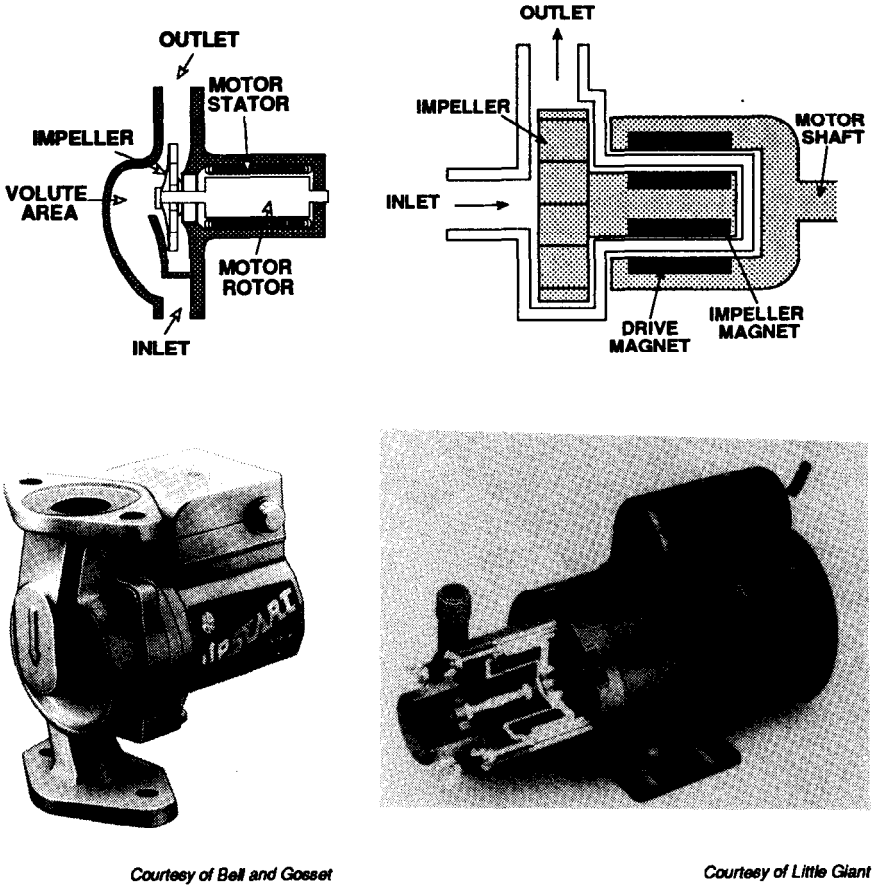


TABLE 2-1: Pump Application Guide

| Application | Typical Choice |
|---|---|
| Potable water, under pressure | Bronze or stainless steel, can be wet or dry rotor, usually high flow, low head |
| Water, no pressure i.e. drainback collector loop | Can be cast iron or steel, can be wet or dry rotor, usually low flow, high head |
| Non freezing liquid, under pressure, (i.e. closed-loop collector loop | Usually cast iron, can be wet or dry rotor, usually high flow, low head |

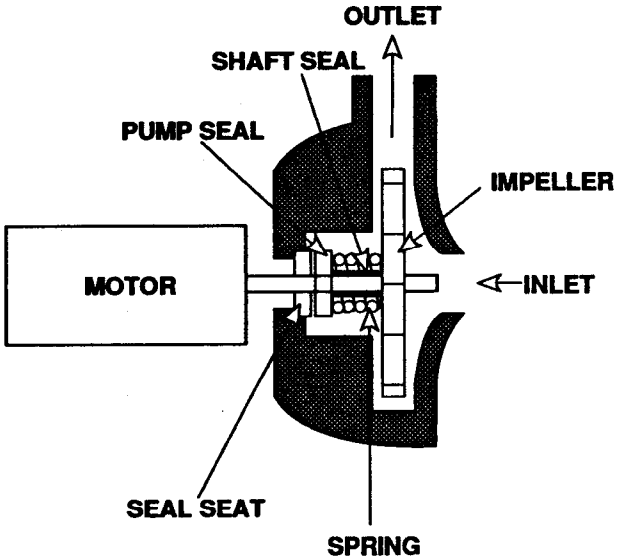


FIGURE 2-21
Dry Rotor Circulating Pumps

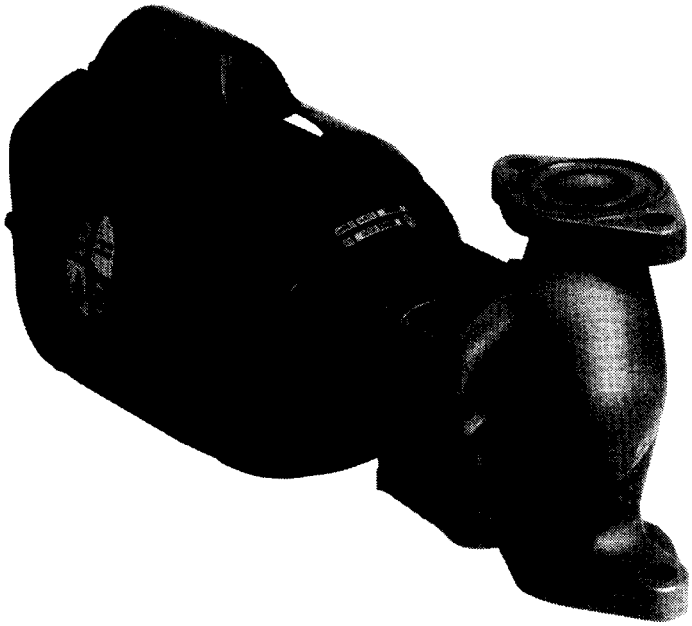

*Courtesy of Bell and Gossett*

**2.7.3 Piping.** Virtually all solar heating system piping is copper tubing. Tubing type ( K, L or M) varies with applications and local code requirements, but follows traditional application rules. Soft and hard copper are both used.

The use of 50/50 tin/lead solder has been banned by the Federal Safe Drinking Water Act Amendments of 1986. It also melts at temperatures too low for solar

heating systems. 95/5 tin/antimony is normally used on most joints. 96/4 tin/silver is recommended for joints involving bronze to avoid leaching the zinc from fittings.

In loops containing fresh water (e.g., potable water), copper, brass, bronze or stainless steel are normally the only appropriate materials. If galvanized piping already exists, it is necessary to use dielectric unions to isolate different metals.

In loops containing non-freezing solar fluids, or water which is never exposed to oxygen (e.g., the collector loops or closed-loop and drainback systems), small amounts of cast iron or steel can be part of a copper piping system. These are normally the wetted components of pumps, expansion tanks, etc.

Aluminum should never be piped into a system with copper, but if it is, special steps such as dielectrics and getter columns must be used.

**2.7.4 Solar Fluids,** The best fluid available for moving the heat from solar collectors is water. Unfortunately, when water is exposed to freezing temperatures it becomes solid and expands, two undesirable characteristics.

Special non-freezing fluids have been developed for solar applications. The three types typically used are:

- o Glycol/Water mixtures
- o Synthetic oils
- o Silicone oils

These materials have different characteristics, but they all have one thing in common, their specific heats and thermal conductivities are lower than water. This results in higher pump and heat exchanger requirements and costs.

CAUTION

Once a system has been filled with a particular type of solar fluid, it should always be recharged with the same material.

Glycols

Glycols are either ethylene glycol or propylene glycol, usually in a 50/50 mixture with distilled or demineralized water. Special inhibitors are added to help prevent the fluid from becoming corrosive.

Propylene glycol is classified as non-toxic, while ethylene glycol is toxic. This difference is critical to occupant safety. Generally, a toxic solar fluid should only be used whenever the heat exchanger is of double wall construction. If a single wall exchanger is used, a non-toxic fluid should be used. This is particularly important when the storage fluid is potable water, as with a DHW system.

Toxic fluids should also be stored and handled carefully. Access by children and pets should be avoided.

Because the glycols eventually break down chemically, annual testing is required.

Piping systems to be filled with glycol mixtures can be pressure tested and flushed with water before the glycol/water mixture is put in the system.- It is important to remove “hung-up” water during the filling process to avoid diluting the fluid.

Pump gaskets and seals, expansion tank diaphragms, valve seals and seats and other elastomers and plastics must be compatible with glycols. Typical acceptable materials are EPDM, Hydrin, Viton and Teflon. Thread sealants must be Teflon-based. See Appendix E for a complete listing of fluids and materials compatibility.

Glycol/water mixtures have a lower surface tension than water. This results in a “leakier” fluid, making tight joints more important than usual.

Synthetic Oils

The major advantage of synthetic oils is their almost unlimited lifetime. Furthermore, unless the fluid leaks out of the piping system, virtually no maintenance is required. Toxicity is low as well.

The specific heat and thermal conductivity of synthetic oils is considerably lower than water. These factors increase pumping and heat exchanger requirements and costs. Synthetic oils attack more materials than the glycols, and can damage roofing materials if spilled. Materials resistant to degradation include Teflon, Viton and Hydrin. Thread sealants must be Teflon-based. Appendix E contains a complete compatibility listing.

The surface tension of synthetic oils is very low, resulting in a fluid which is even more difficult to confine in piping.

Synthetic oils must never be mixed with water, and must be introduced into a perfectly dry piping system. Water must never be used for pressure testing or flushing.

Silicone Oils

Silicones have many of the characteristics of synthetic oils. Differences include an even lower surface tension, so they are even harder to confine. Thread sealants must be fluorosilicone-based, or joint failure is inevitable. Silicone oil is very expensive, typically 3 to 10 times the cost of other fluids.

Silicone oils must never be mixed with water, and must always be introduced into clean, dry piping systems. Water must never be used for pressure testing or flushing.

**2.7.5 Heat Exchangers,** The purpose of a solar heat exchanger is to transfer the collected solar heat from a non-freezing fluid into the water in the storage tank. Heat exchangers used in solar heating systems are typically one of three types:

- o Tube-in-tube
- o Coil-in- tank
- o Shell and tube

Tube-in-Tube

Tube-in-tube heat exchangers are typically used on smaller systems (20 sq. ft. to 600 sq. ft. of collector area). As their name implies, they consist of a tube within a tube. One fluid moves through the innermost tube, and the other fluid moves in the opposite direction through the space between the outer and inner tubes. (Figure 2-22)

In many cases, two tube walls are between the fluids, affording double wall protection to the water being heated. In most double wall exchangers of this type, small passageways between the two walls provide leak detection and prevent any possibility of contamination.

Some designers choose to have solar fluid in the innermost tube, and others prefer to use it for water. Be sure you know which design is used for a particular system before undertaking repairs.

Most manufacturers add small fins to the wetted surfaces of tube-in-tube heat exchangers. This increases the surface area and keeps the fluid in turbulent flow, resulting in improved heat transfer rates.

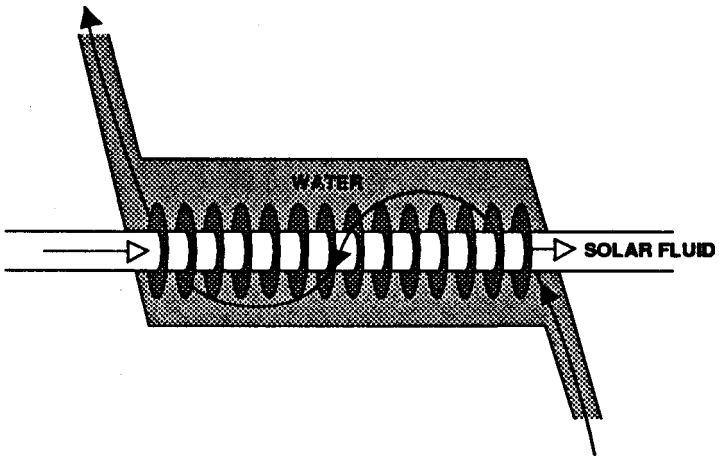


FIGURE 2-22
A Tube-in-Tube
Heat Exchanger

Coil-in-Tank

Another heat exchanger used for small systems is the coil-in-tank. (Figure 2-23) In this type, a coil is immersed in the storage tank itself. Heated solar fluid is pumped through the coil. The tank water surrounding the coil is continually heated and rises by natural convection.

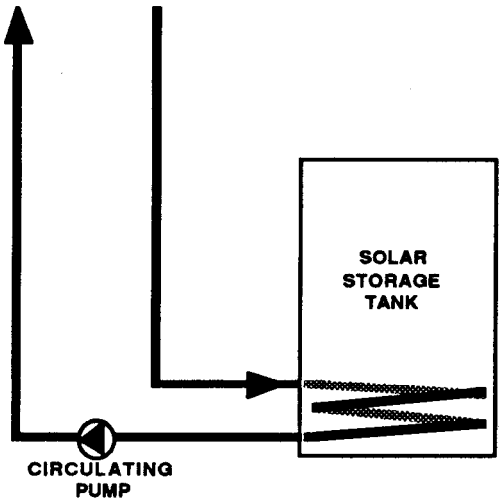


FIGURE 2-23
A Coil-in-Tank
Heat Exchanger

Tanks fitted with heat exchangers are made with both double and single wall exchangers. Be sure to use a non-toxic solar fluid whenever the heat exchanger is single wall.

Most coil-in-tank units feature a finned outer surface to improve heat transfer. In many cases, the inside of the coil is textured to further improve performance.

Many drainback systems also use a coil-in-tank type of heat exchanger. The collector water reservoir tank may have a small coil inside it which the storage water is pumped through. In this case, the hotter fluid is outside the coil, and the cooler water to be heated is inside the coil.

Shell and Tube

Shell and tube heat exchangers, used for a multitude of other heat transfer applications, are also found in solar heating systems. The water to be heated moves through the tubes, and the solar fluid providing the heat passes over the tubes through the shell. (Figure 2-24)

Shell and tube heat exchangers are made with both double and single wall construction. Be sure to use a non-toxic solar fluid whenever the heat exchanger is single wall.

FIGURE 2-24
A Shell and Tube
Heat Exchanger

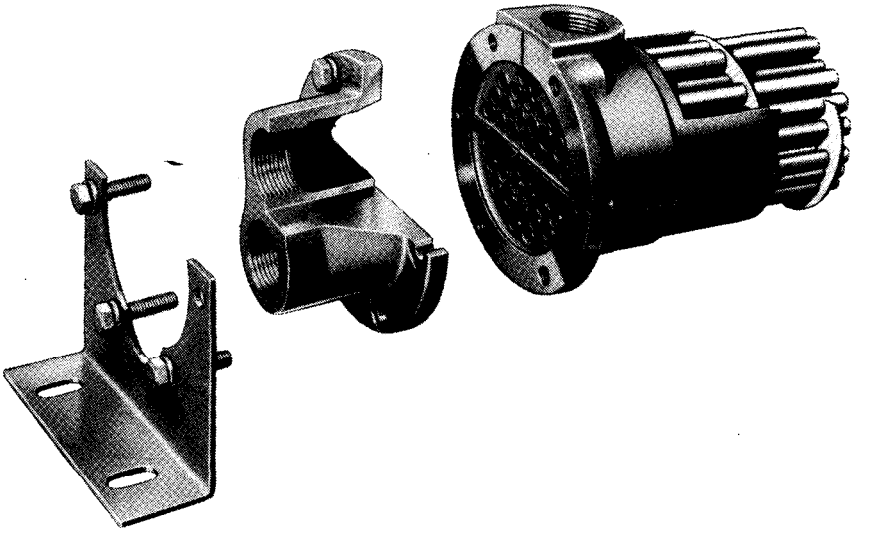

*Courtesy of Young Radiator Company*

**2.7.6 Storage Tanks.** Almost all storage tanks used for solar applications are pressurized steel tanks. All pressure tanks must have ASME approval. A variety of linings are used:

- o Glass
- o Stone
- o Epoxy
- o Phenolic resin
- o Cement
- o Galvanized

Glass Lined

The glass or porcelain lined tank is the most widely used. (Figure 2-25) It is available in stock standard sizes from a few gallons to 120 gallons. Larger sizes, up to thousands of gallons, can be constructed on a custom-made basis. In many cases it is more cost-effective to use two or more “standard” tanks rather than one large “custom” one. Many manufacturers offer tanks with internal coils.

A lining is necessary, because a large amount of oxygen is dissolved in the storage water. In DHW systems, new water, with new supplies of dissolved oxygen, is introduced every day. This dissolved oxygen makes the water corrosive to untreated steel.

Other water conditions increase its corrosiveness. In some areas, the pH of the water is low. This acidic condition accelerates corrosion. Sometimes the amount of dissolved solids in the water is high, which also increases the problem.

If any gaps in the glass lining exist, the water will attack the bare steel. In a matter of months, a leak will occur, even in areas with “good” water.

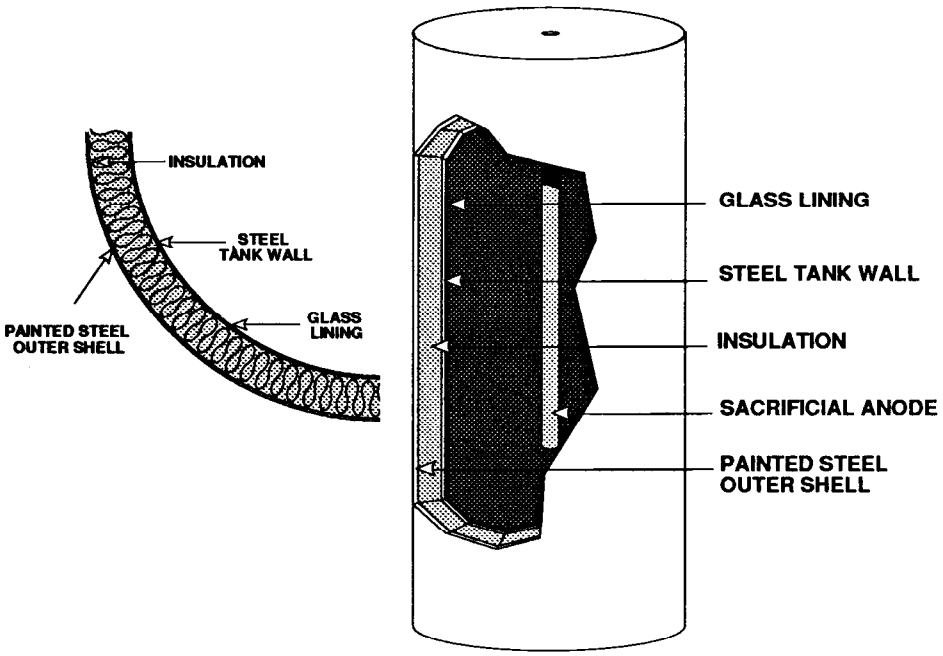


FIGURE 2-25
Glass Lined
Storage Tank

Anode rods are used to protect exposed tank metal from corrosion. If two different metals are in contact with each other and water, the less “noble” of the two metals will corrode first. Once the first metal is completely eaten away, the second metal will begin to corrode.

The anode rod is sometimes called a “sacrificial anode,” because it is sacrificed to protect the steel of the tank. If the anode is never allowed to completely dissolve, it will continue to protect the tank. (Figure 2-25)

Stone Lined

Another approach to tank wall protection is to apply a thick lining of low sulfur cement to the inside. After the tank is baked, a thick stone lining completely covers the tank walls. This lining is very hard to break.

Normally, no anode rod is used on stone lined tanks. This eliminates one maintenance step. However stone lined tanks weigh around 50% more than glass-lined tanks. (Figure 2-26)

Stone lined tanks are readily available in standard sizes of 40 to 120 gallons. Most manufacturers offer tanks with an internal heat exchanger coil.

FIGURE 2-26
Stone Lined
Storage Tank

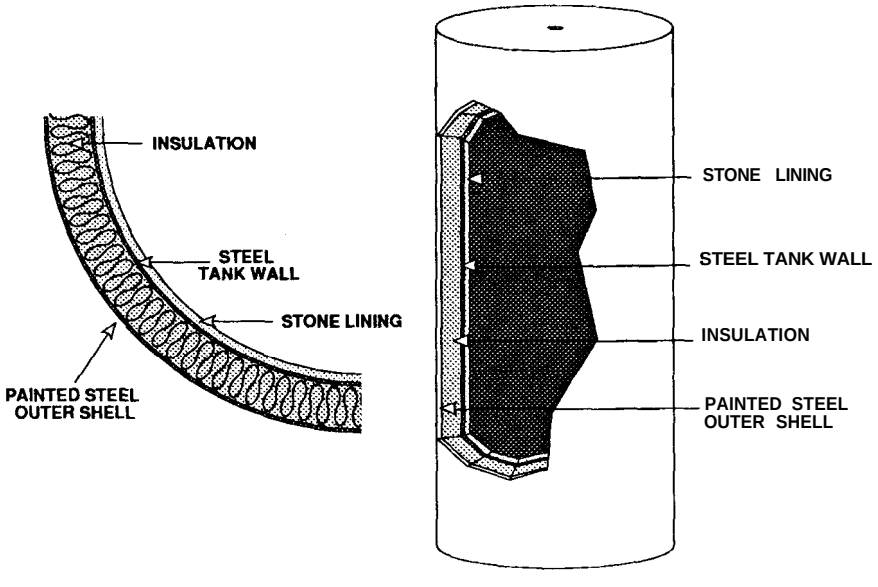

Epoxy and Phenolic Resin Lined

These linings are used primarily on large tanks. They can be applied by installation personnel at the site, but are normally applied by the manufacturer.

Cement Lined

This type of lining is used primarily on large tanks. It is similar to the stone lining, except that it is not baked on. This lining can be applied by installation personnel at the site, but is normally applied by the manufacturer.

Galvanized

Galvanized tanks are made by dipping the steel tank into molten zinc. They are rarely used now, due to corrosion problems between the zinc and copper piping systems.

**2.7.7 Valves and Other Components.** A solar heating system contains numerous other components which perform a variety of functions. These include some or all of the following:

- Shutoff valves
- Balancing valves
- Check valves
- Pressure relief valves
- Pressure and temperature relief valves
- Fill/drain valves (for solar fluids)
- Expansion tanks
- Backflow preventers
- Drain valves (for solar fluids or water)
- Air vents
- Air eliminators
- Control valves (for draindown systems)
- Vacuum breakers
- Three way diverting valves

The body materials, construction, seals and gaskets of system components must be appropriate for the solar fluid being used and the highest potential temperatures and pressures for the system.

Shutoff Valves

Shutoff valves are used to isolate other system components to allow service without requiring the complete draining of the system.

For shutoff purposes, gate valves or ball valves should be used. (figure 2-27) Globe valves, because of their high resistance to flow, should never be used in any part of the system.

Tanks, heat exchangers, the cold water supply, and banks of collectors are typical candidates for shutoff valves. Pumps can be isolated as well, using either separate valves or isolation flanges

Isolation valves should not be used on solar collector arrays unless a pressure relief valve is in the piping between valves.

Balancing Valves

An ideal collector array is piped so that all the collectors receive an equal flow automatically. However, sometimes it is necessary to install balancing valves in the collector piping to accomplish this.

FIGURE 2-27
A Gate Valve (left) and a Ball Valve (right)

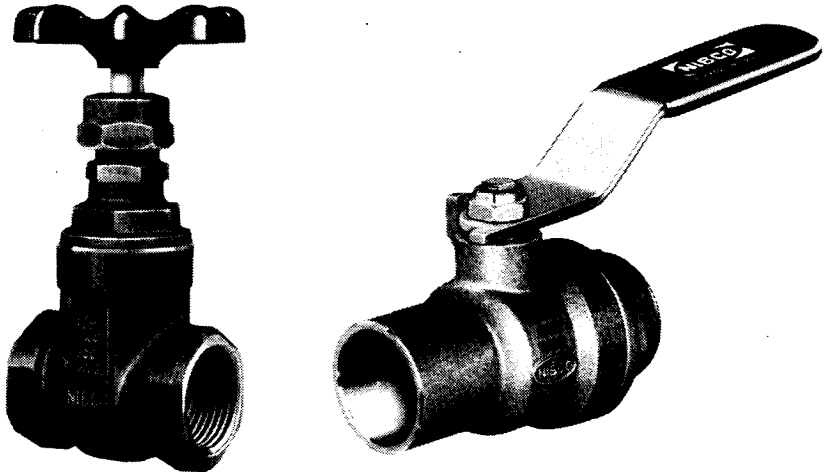


*Courtesy of NIBCO* *Courtesy of NIBCO*

Balancing valves should be ball valves, and should be installed in the inlet line at the top of a group of collectors. Every group of panels should also have a thermometer or the equivalent installed in its outlet. (Figure 2-28) When all the outlet piping temperatures are equal, the flows are properly balanced between collector groups.

Check Valves

Check valves allow fluid flow in only one direction. They are used in closed-loop and draindown systems to prevent heat loss at night by reverse thermosiphoning.

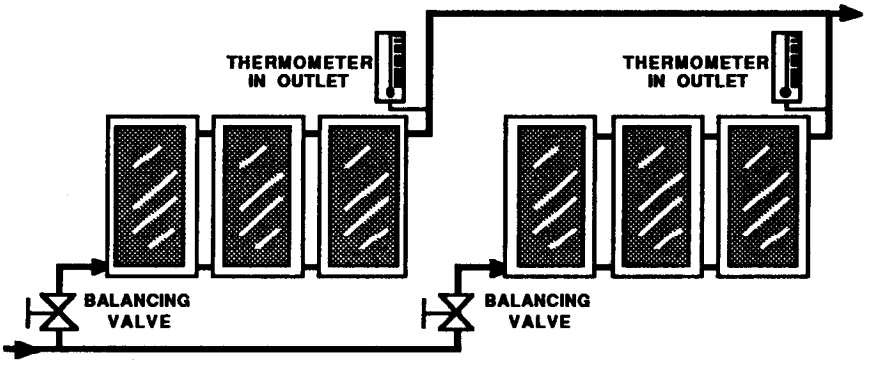


FIGURE 2-28
Balancing Valves and Thermometers Installed On a Collector Array

The best choice for this application is a spring-loaded check valve. Make sure the seat and seals are appropriate for the fluid being used. (Figure 2-29)

It is also worth noting that tests of large numbers of check valves have found wide variations in opening pressures and high overall failure rates. For this reason, it is important to inspect check valves for proper operation at every system inspection, as explained in the inspection chapter, Section 3.1.3.

Pressure Relief Valves

These valves (sometimes called PRV's) are used only in the collector loop of closed-loop systems. Since they only respond to pressure changes, they should not be used on pressurized water (city water) lines or tanks. A strong internal spring keeps the valve closed until the system pressure exceeds some preset limit. (Figure 2-30)

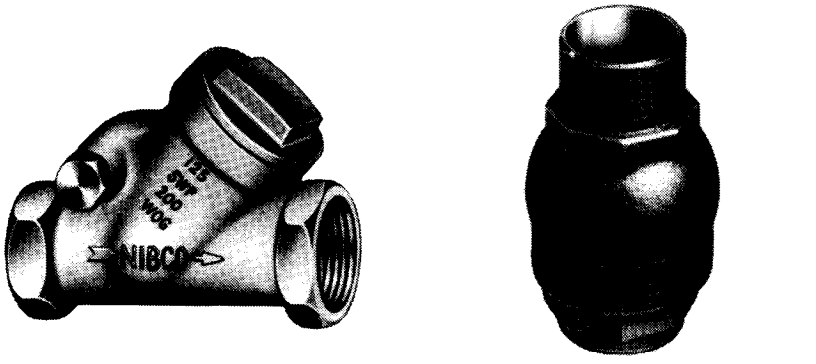


*Courtesy of NIBCO* *Courtesy of NIBCO*

FIGURE 2-29
Swing (left) and Spring (right) Check Valves

The outlet port of pressure relief valves is piped downward to within 10 in. of the floor, to protect anyone who happens to be nearby, and to minimize damage to electrical and other components, should the valve open.

Temperature and Pressure Relief Valve

Sometimes called "T and P's," these valves are similar to pressure relief valves. However, a temperature and pressure relief valve includes a temperature sensitive element at the valve inlet that extends a few inches into the hottest water at the top of the storage tank or water heater. (Figure 2-31)

FIGURE 2-30
Pressure Relief Valves

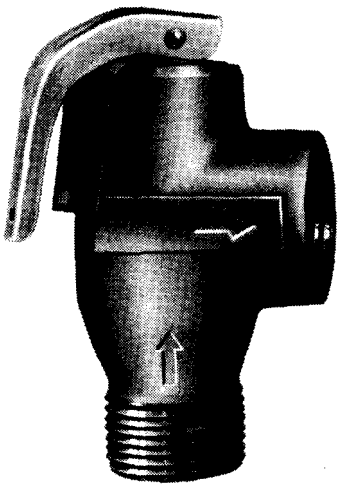

Courtesy of Watts Regulator Co.

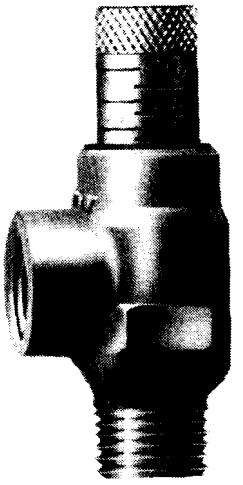

Courtesy of Watts Regulator Co.

FIGURE 2-31
A Temperature and Pressure Relief Valve

Courtesy of Watts Regulator Co.

These valves are normally set for 150 PSI and/or 210°F. If either condition is exceeded, the valve will open and discharge water. Most codes require a “drop line” from the outlet of the valve to a point within ten inches of the floor, to protect anyone nearby, and to minimize damage to electrical and other components, if the valve opens.

Pressure and temperature relief valves are not designed for use in solar collector loops, as they open at temperatures well below typical operating conditions.

Fill/Drain Valves

These valves are used for introducing or removing non-freezing solar fluid from the collector loop of closed-loop systems. (Figure 2-32) Simple boiler drains can be used, if their seats and packings are compatible with the solar fluid. In other cases, a shutoff valve and a hose adapter perform the same function without compatibility problems. Finally, specialized poppet valves have been used by different manufacturers for this purpose.

As discussed in Section 2.2, the fill/drain assembly includes the two valves on each side of a shutoff valve or check valve. As solar fluid is pumped into the system, the center valve forces the fluid to move up through the collectors, and back out the other side of the assembly. Since the fluid goes back into the bucket it was originally pulled from, it moves around and around the system, forcing out the air. After charging, the fill/drain valves are closed. If children have access to the system, caps are normally provided to reduce the chance of tampering.

This process ensures a completely filled system, but it does require an independent pump for charging the system.

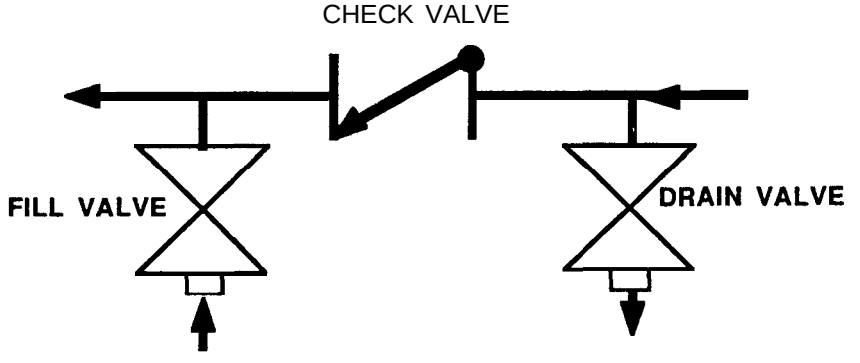


FIGURE 2-32
The Fill/Drain Assembly During System Filling

Expansion Tanks

Expansion tanks are normally used in the collector loop of closed-loop systems. Occasionally they are found in the cold water supply to storage tanks, but only if a backflow preventer or check valve is also in that line.

CAUTION

Whenever an expansion tank is installed in a loop with a pump, it must be on the suction side of the pump. (Figure 2-33) Installation of an expansion tank on the discharge side of the pump can result in pump cavitation and damage.

Because fluids are not compressible, expansion tanks are needed to maintain a fairly stable system pressure. Without one, a closed piping system undergoing temperature changes would fluctuate from zero pounds to many hundreds of pounds of pressure.

Expansion tanks for solar fluids are normally constructed of raw. or galvanized steel. (Figure 2-34) Some have a flexible internal diaphragm maintaining a separate air cushion. (Figure 2-35) Diaphragm-type tanks are preferred for solar applications. The air side of the tank usually has a Schrader valve (similar to the ones used on automobile tires) to allow checking and changing the air pressure. The air cushion normally comes pre-charged from the factory at 12 PSI.

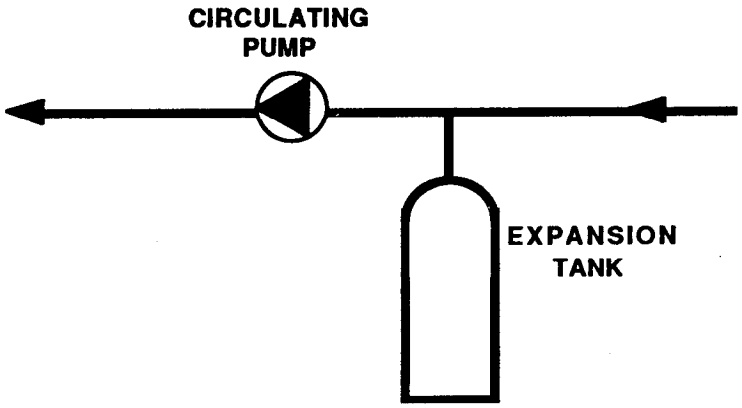


FIGURE 2-33
Proper Expansion
Tank Placement

The standard diaphragms used on expansion tanks for the traditional hydronic applications are neoprene. These are quickly destroyed by all non-freezing solar fluids currently in use. Glycols should use an EPDM or Hydrin diaphragm, and both types of oils must use one made of Hydrin. Galvanized tanks should never be used with glycols.

Expansion tank sizing, combined with calculations of the appropriate system fill pressure, are very important with closed-loop systems. Undersized tanks or incorrect fill pressures usually result in a loss of system fluid, followed by other negative consequences.

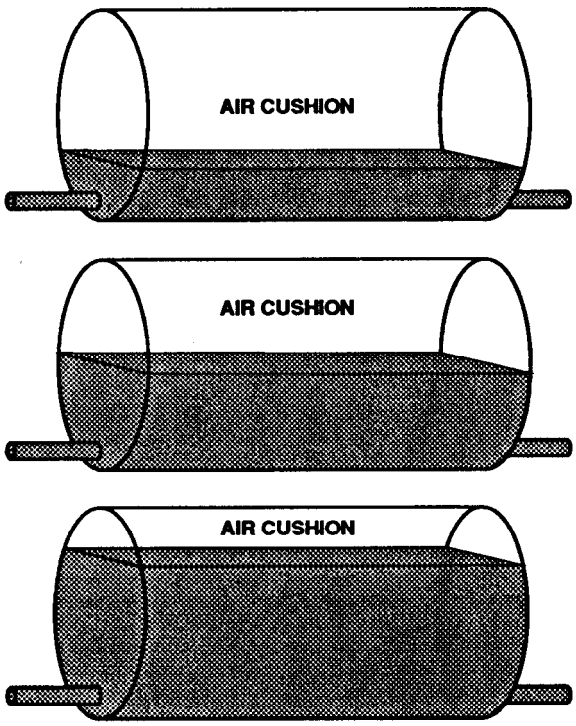


FIGURE 2-34
An Expansion Tank
Without a Diaphragm
as Fluid Pressure
Increases

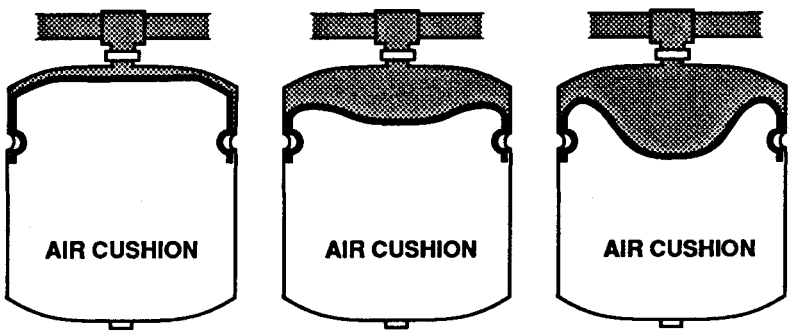


FIGURE 2-35
An Expansion Tank
With a Diaphragm
as Fluid Pressure
Increases

Expansion tanks used for potable water are similar to a diaphragm tank, but a plastic liner on the liquid side keeps the water from contacting the steel wall of the tank.

Again, an expansion tank is needed only if the cold water supply line to the storage tank includes a backflow preventer or check valve. In this case, the expansion tank acts to absorb the expansion of the storage water as it is heated. Without some expansion capacity, the water pressure will slowly build up until the temperature and pressure relief valve on the storage tank discharges.

Pressure Reducing Valves

Glycol-filled loops must never be equipped with automatic water make-up. If glycol leaks out and is replaced by water, the system will not be protected against freezing damage.

Oil-filled loops must never have water introduced to them.

Draindown systems do not normally require a pressure reducing valve, and it is difficult to design an effective automatic water make-up system for drainback systems. Therefore, automatic water make-up is rarely used on collector loops.

Backflow Preventers

In some areas, code officials may require an approved backflow preventer in the cold water supply to the storage tank. A check valve is not an appropriate substitute.

The discharge port of a backflow preventer must be piped downward to avoid damaging electrical and other components, and to prevent injury to anyone in the area during blowoff.

Whenever a backflow preventer (or a check valve, despite its unacceptability) is installed, an expansion tank must be installed between the tank and the backflow preventer. If the expansion of the storage water is not accepted somewhere, the temperature and pressure relief valve on the tank will discharge heated water on an almost daily basis. (Figure 2-36)

Drain Valves

Some provision for draining the liquids from all the system loops should be made. In water loops, a simple boiler drain at all low points is used. The storage tanks, particularly those in DHW systems, must be drainable for service and maintenance.

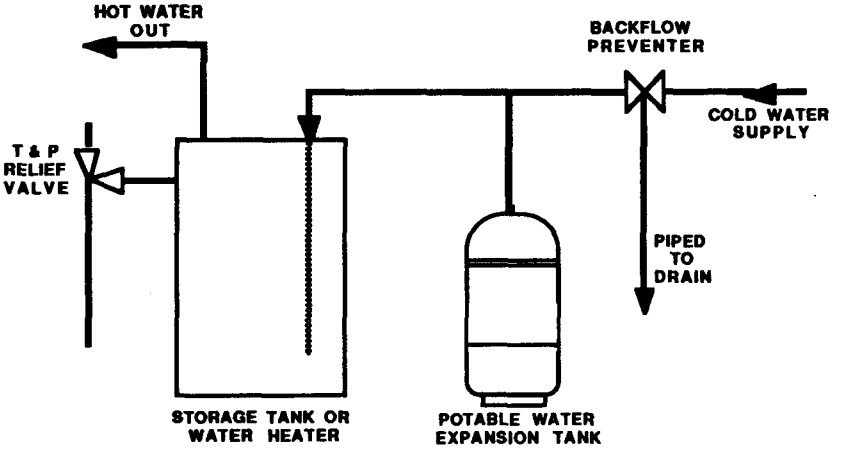


FIGURE 2-36
Proper Backflow Preventer and Expansion Tank Placement

In loops filled with solar fluid, the fill/drain assembly may be all that is required for complete system draining. If the piping must be routed in such a way that local low points are created, each low point should be equipped with a drain.

Boiler drains may not be acceptable for this purpose, because their seats and packings may not be compatible with the solar fluid. The simplest way to provide an inexpensive drain is the use of an all-metal "coin vent." These manual air vents have no plastic or rubber seals and are relatively inexpensive. If the low spot is at an elbow, a baseboard tee can be used instead of an elbow. These tees include an 1/8" female threaded port designed for the coin vents. (Figure 2-37)

Whenever a drain is being used, air must be introduced into the top of the loop to speed up the draining process. The following section on air vents provides some information on this.

Air Vents

Automatic (float type) air vents, as shown in Figure 2-38, are probably the most incorrectly applied component in solar systems. Very few, if any automatic air vents are capable of withstanding the pressures, temperatures, solar fluids and other conditions they are exposed to in solar applications.

Automatic air vents can be used only in piping loops containing water. If used with solar fluids, an automatic air vent would eventually vent enough fluid vapor or leak enough to render the system inoperative. Automatic air vents shall not be installed in piping loops containing solar fluid.

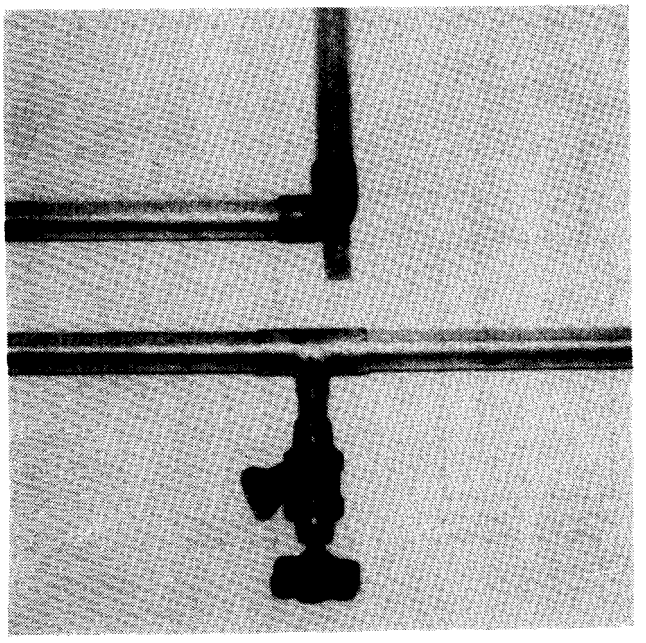

FIGURE 2-37
Baseboard Tee with Coin Vent (top) and a Boiler Drain (bottom)

The high points of closed-loop systems containing solar fluids must be vented, but with manual (coin) vents. (Figure 2-39) The vent should be a simple needle valve, with absolutely no plastic seals, seats, wafers, or other non-metal components. During installation and maintenance procedures, service personnel can open the valve to check for air or to let it out. Otherwise, the vent stays closed.

FIGURE 2-38
An Automatic Air Vent

*Courtesy of Bell and Gossett*

The high points of draindown and drainback collector loops, and the high point of storage water loops should use a high-pressure automatic air vent. The vent must be rated for at least 125 PSI, although 150 PSI is better.

The cap on automatic air vents is used to prevent the entry of dust which would clog the mechanism, so it is never fully tightened.

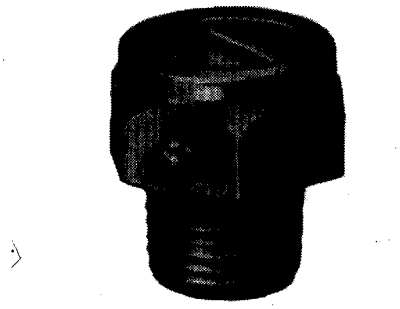

FIGURE 2-39
A Manual Air Vent

*Courtesy of Bell and Gossett*

The air vent should be constructed of metal. Plastic air vents are not recommended because catastrophic failure is common.

Air Eliminators

Air eliminators, also called air scoops, are normally used only on the collector loops of large closed-loop systems. Their internal construction includes vanes to push entrained air bubbles upward to a holding chamber. When enough bubbles have been collected, an automatic air vent at the top of the unit vents the air. (Figure 2-40)

The air vent should allow flow only during startup operations. They must be closed during normal operation, after all the air has been removed from the system. Again, be sure the vent is capable of withstanding the solar fluid itself, and the system pressures.

Most air eliminators feature a threaded port on the bottom for the system expansion tank. This is acceptable, but it means the eliminator/vent/expansion tank package must be installed on the suction side of the solar pump.

FIGURE 2-40
An Air Eliminator

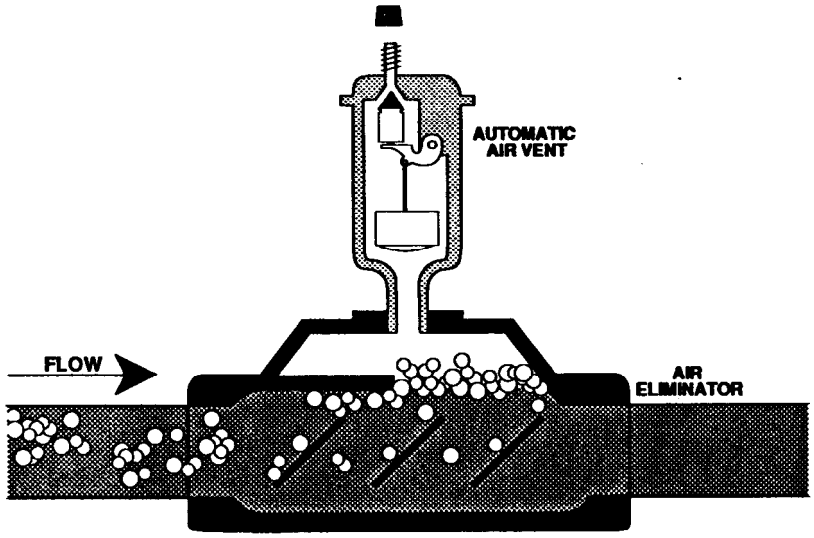


Collector Loop Control Valves for Draindown Systems

Draindown systems can be emptied and filled by a single control valve, or a group of three individual solenoid valves. In either approach the system control operates the valve package, draining the collectors and exposed piping during times of freezing temperatures, and refilling it during warmer periods.

Larger systems use two normally closed solenoid valves and one normally open one in the configuration shown in Figure 2-41. When outdoor temperatures are above freezing the two normally closed valves are open, allowing water from the tank to fill the collector loop. The normally open valve in the drain line is closed, keeping water in the system.

To drain the collectors and exposed piping, the power to all three valves is turned off. Normally closed valves keep water out of the collectors. The normally open valve allows water to drain from the collectors. This water is not recovered, and is piped to a drain. The system is considered “fail-safe,” because under normal failure modes, such as a power failure, the system will drain, thus failing in a safe state.

Standard solenoid valves are typically used in this type of system. For adequate flow, a minimum of 1/2 inch or 3/4 inch ports are required. The solenoids are usually 120 volts, and wetted materials are normally brass or stainless steel.

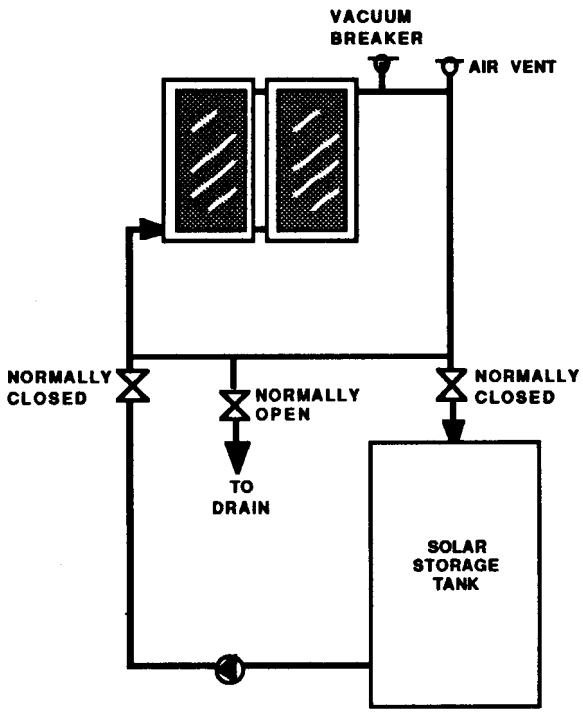


FIGURE 2-41
A Draindown System
Using Three Solenoid
Valves

Special control valves are of a rotary or spool valve type. Both are typically used on small systems only, due to their limited flow capacity. Their basic principle of operation is identical to the three solenoid valve system. (Figure 2-42)

Draindown control valves usually include a check valve to prevent nighttime heat loss by reverse thermosiphoning. This heat loss can occur on nights warm enough for the collectors to be filled.

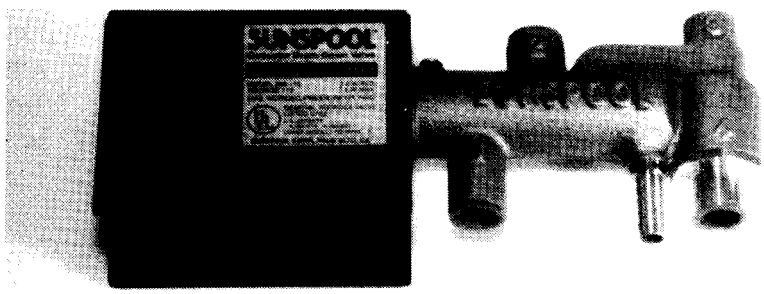


FIGURE 2-42
An Automatic
Draindown Control
Valve

Vacuum Breakers

A vacuum breaker remains closed only as long as the system it is piped into has pressure. When the system pressure falls below atmospheric pressure, it opens. Vacuum breakers are used at the top of draindown and drainback systems to allow air to enter the loop to facilitate rapid drainage. They are sometimes installed above the cold water inlet of storage tanks and water heaters to eliminate vacuum conditions that could collapse the tanks. (Figure 2-43)

FIGURE 2-43
A Vacuum Breaker

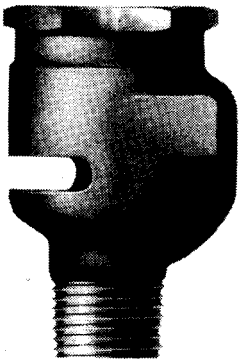

*Courtesy of Watts Regulator Co.*

As is the case with automatic air vents, no vacuum breaker manufacturer endorses the use of their product outside.

Three-Way Diverting Valves

Some space heating applications, particularly those involving hydronic back-up, use motorized three way valves for automatic control of the distribution of solar heat. The valve must be rated for the water pressure and temperatures expected in the system, but these are not normally a problem.

Manual three-way valves (Figure 2-44) are sometimes used to isolate or bypass the storage or back-up heaters in DHW systems. Because slight amounts of leakage are typical, they cannot be used as shutoff valves for service purposes. However, as an isolation or bypass valve, they are more convenient than a pair of two-way valves.

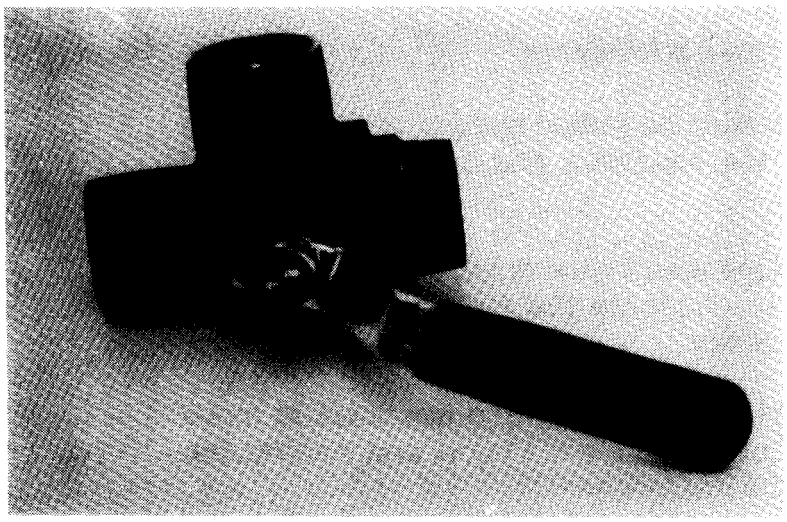

FIGURE 2-44
A Manual Three-Way Valve

**2.7.8 Pipe and Tank Insulation,** The most efficient solar heating system cannot deliver heat it has lost from piping and tanks. System insulation must be thermally adequate, continuous and durable. Regular inspection and maintenance is necessary to ensure the insulation and jacketing have not been damaged.

Pipe Insulation

At a minimum, all solar piping under 1 inch size (nominal) should be insulated to R-4. All piping 1 inch or larger should be insulated to at least R-6. Exterior piping of all sizes benefits from insulation to R-7. (Figure 2-45)

Protection from moisture and ultraviolet radiation is necessary for all exterior insulation. (Table 2-2)

Polystyrene or polyethylene should never be used for solar applications. These materials melt at a temperature of 165ºF, well below the expected temperature for piping in most parts of all systems.

Good insulation practices require the following:

- All exterior joints must be sealed and protected, including those between the insulation and collectors, and roof penetrations.

- Pipes must be supported on the outside of the insulation, using saddles to distribute the piping weight without crushing the insulation.

- Pipe supports must allow piping and insulation to move during periods of thermal expansion and contraction without tearing the insulation.

TABLE 2-2: Typical Solar Pipe Insulations

| Material | R-value (per in.) | Trade Name(s) | Notes on use |
|---|---|---|---|
| Fiber glass | 4.0 | CertainTeed | Must be protected from moisture, joints are difficult to fabricate, Max. temp. is 300°F |
| Closed cell flexible elastomeric foam | 3.5 | Armaflex Rubatex | May require two layers, does not need moisture protection, must have UV protection, max. temp. is 220°F |
| Closed cell rigid urethane and poly-isocyanurate foams | 6.5 to 7.0 | Solar-7 Insultek Insulsleeve | Must have UV and moisture protection, max. temp. is 250°F |

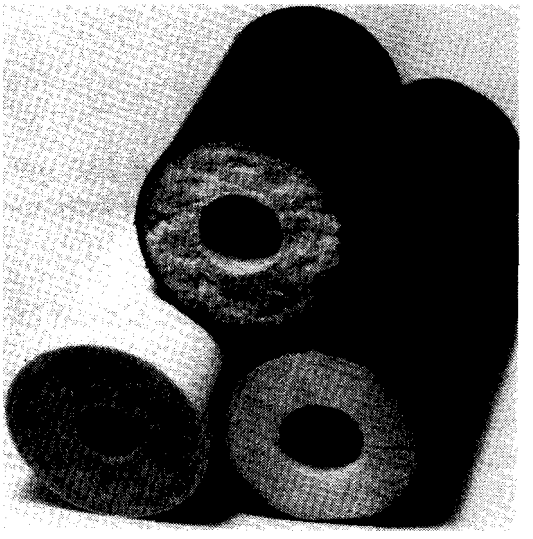

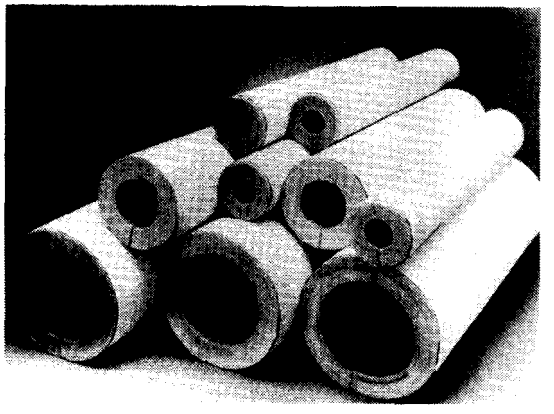

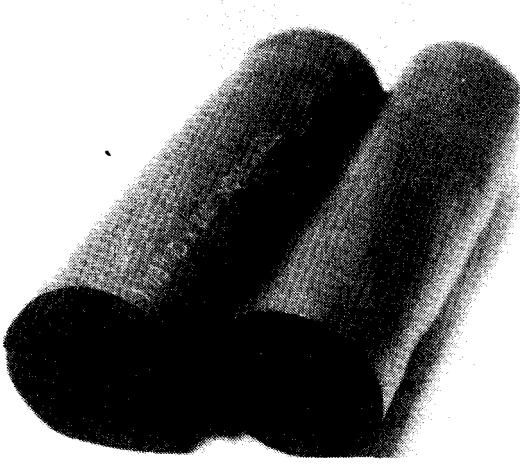

FIGURE 2-45
Closed Cell (Top),
Fiber glass (Center),
and
Elastomer (Bottom)
Insulation

Tank Insulation

Like regular water heaters, most solar storage tanks of 120 gallon capacity or less are insulated with fiberglass or urethane foam insulation between the tank wall and outer jacket.

For interior use, the insulation on these smaller tanks should be at least R-12, with R-20 a better choice.

In some cases additional insulation blankets are installed on the outside of the tank jacket. If the blanket is maintained, and does not limit access to tank components, this is acceptable. (Figure 2-46)

For larger tanks, above 120 gallons, even more insulation is appropriate. R-30 is recommended for tanks whose temperatures are 140°F or lower the majority of time. Tanks which routinely reach over 140°F are normally insulated to R-40. “Blown-on” foam insulation is typically used.

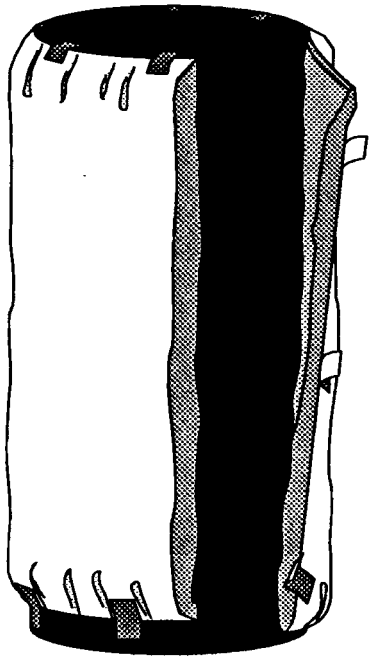

FIGURE 2-46
Storage Tank
Insulation

2.7.9 Controls and Sensors, The collection system control operates by comparing the temperatures of the collectors and storage. When the collectors are warmer than the storage, collection pumps are turned on. If the collector temperature falls below the storage temperature, the pumps turn off.

Because the control is concerned with temperature differences, rather than absolute temperatures, it is called a differential thermostat.

Typically, the collectors must be 10°F to 20°F warmer than the storage water before the system is turned on. As long as the collectors are at least 3ºF to 8°F warmer than storage, the system pumps stay on. If the collector/storage differential is less, the system is turned off. These two differential settings are referred to as the "delta-T on" and "delta-T off." Sometimes the two settings are shown together. For example, a control with a 20°F on differential, and a 5°F off differential would be described as a "20/5."

The control determines system temperatures with electronic sensors. These are usually resistors which change their electrical resistance with temperature. The most accurate ones used in solar systems are called resistance temperature detectors (RTD's). These are more expensive and less common than the thermal resistors called thermistors. (Figure 2-47)

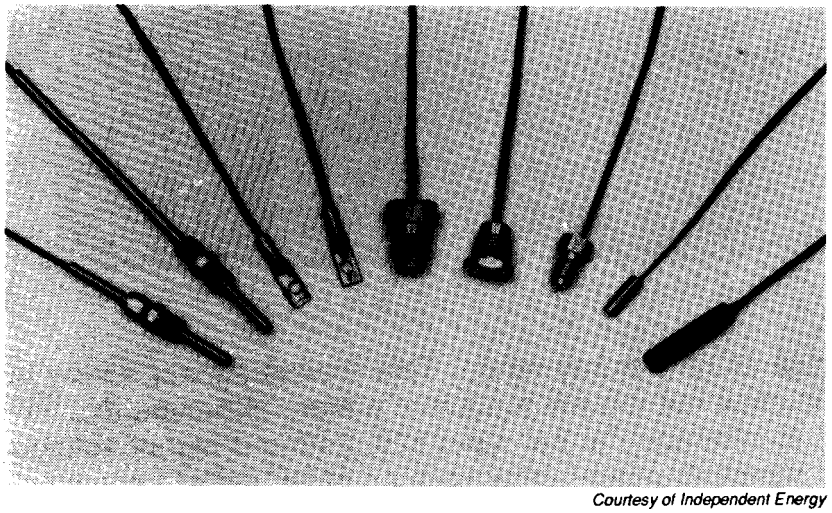

*Courtesy of Independent Energy*

FIGURE 2-47
Various
Thermistor
Sensors

The relationship in a thermistor between electrical resistance and temperature is inverse. That is, when the sensor's temperature goes down, its resistance goes up. Temperature increases result in resistance decreases. Tables 3-3 and 3-4 in Section 3.1.7 show the relationships between temperature and resistance for the two most common types of sensors.

The construction of sensors depends on their application. Some have a mounting tab with or without a hole for a fastener. Others resemble a threaded plug. They can be very heavy or very small and light. Most are built to attach to the surface that requires sensing.

One exception is the collector sensor on pool heating systems. It is not attached to the collector. It is built and mounted on the roof or rack next to the collectors. Because it has nearly the same thermal characteristics as the collectors, it “impersonates” the collector temperature for the control to use. (Figure 2-48)

Controls and sensors are available in two types: 10K and 3K. These refer to the resistance the temperatures have at “room” temperature (77°F). A 10K sensor has 10,000 ohms resistance at this temperature, a 3K has 3,000 ohms.

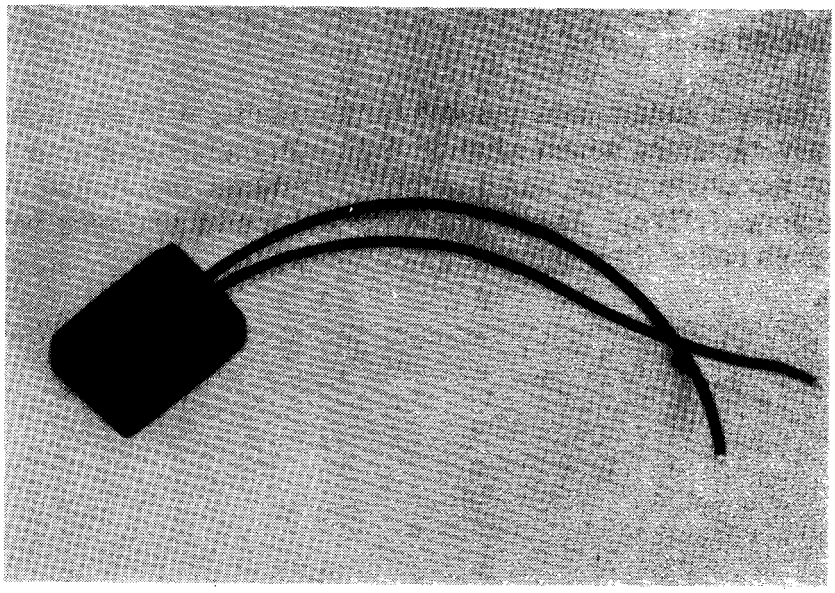

FIGURE 2-48
A Pool System
Collector Sensor

Normally, the sensors operate at only a few volts. This means sensor wiring is considered Class 2, and thus does not require conduit or armor. However, this low voltage wiring is susceptible to electrical “noise” from 120, 240 and higher voltage wiring, electric motors, radio transmitters and other sources of RF (radio frequency) noise.

The usual solution to this problem is to maintain adequate distance between the controls, sensors and wiring, and the source of noise. If this is not possible, shielded cable is used.

Most controls have a three-position switch with the functions marked “on,” “off,” and “auto.” In the “on” position, the control ignores the sensor signals and operates the pumps constantly. In the “off” position, the sensor signals are ignored, and the pumps remain off. The “auto” position is used for normal, automatic operation. (Figure 2-49)

Other controls may have a switch position marked “run” instead of “auto”. In non-freezing climates, the control may turn on the collector loop pump to keep the water in the collectors from freezing. The control may open the collector loop control valve to drain the collectors. In either case, a light marked “freeze” or “FRZ” may be supplied to let users know the collectors are being protected from freezing. (Figure 2-49)

Most differential thermostats include a storage temperature high limit function. When the storage tank reaches a pre-set absolute temperature (typically 160°F-180°F), the collection pumps are turned off. The control may have a sensor specifically for this high limit function, or it may simply use the one also used for differential measurement. See Table 2-3 for more information.

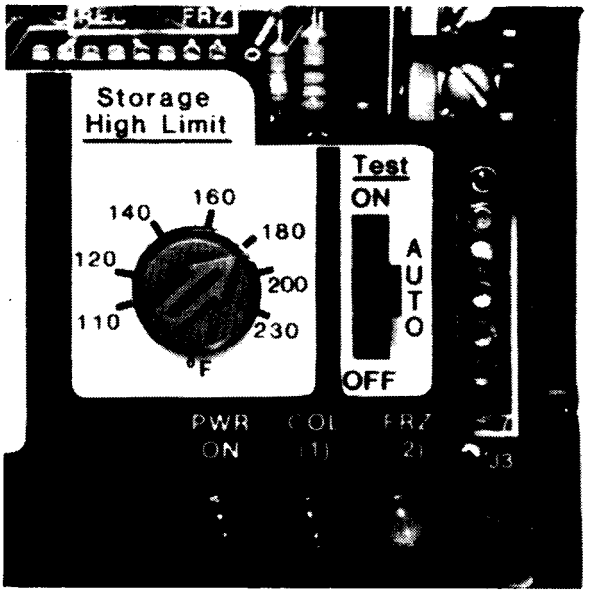


FIGURE 2-49
A Typical Differential Thermostat Showing High Limit Adjustment Dial (left) and Switch (right). Note Indicator Lights Below Dial and Switch

Another specialized function of differential thermostats is freeze detection. On draindown systems, when the collector temperature begins to approach freezing, the control valve is turned off, and the collectors and exposed piping are drained. Freeze sensors are usually snap switches which are either completely closed or completely open. (Figure 2-50)

In some systems, one or more freeze snap switches are installed in series or parallel with the collector sensor. In others, they are part of a separate circuit.

Some controls feature a digital display showing all the sensor temperatures. In many cases, these controls have added channels to allow monitoring of additional system points.

FIGURE 2-50
Freeze Snap Switch Sensor

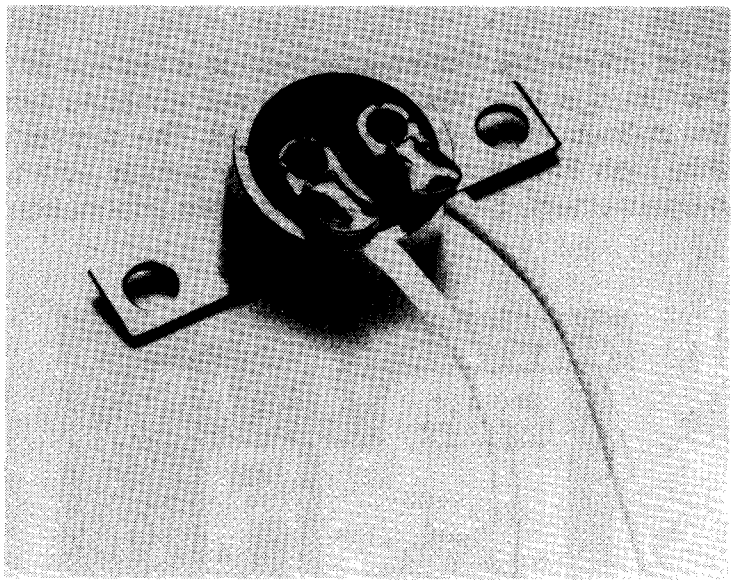

*Courtesy of Independent Energy*

TABLE 2-3: Control Features and System Types

| Control Feature | Closed-Loop | Drainback | Draindown |
|---|---|---|---|
| Differential Temperature Control | Always | Always | Always |
| Drain on Freeze | Never | Never | Always |
| High Limit on Storage Temperature | Usually | Usually | Usually |

2.7.10 Gauges. Measurements of two properties are usually necessary; temperature and pressure. Other things can be measured or monitored, but these two are the most critical.

Temperature

Temperatures in solar systems are measured in one of three ways:

- Fixed thermometers
- PT plugs or thermometer wells (with movable thermometers)
- Electronic sensors (usually thermistors)

Price and accessibility are the usual criteria for deciding which approach to use at a particular system point. All are sufficiently accurate for normal purposes.

Measuring collector feed and return line temperatures allows service personnel to confirm solar loop flow, and to get a rough idea of system performance. More information on this subject is found in Section 4.3.5 in the troubleshooting chapter. Figures 2-51 and 2-52 are examples of two methods of measuring these temperatures.

In systems with a pumped storage loop between a heat exchanger and the storage tank, two more temperature measurement points may be appropriate. At a minimum, the storage tank outlet should be equipped with a way to measure temperature. This allows service personnel to confirm that energy has been transferred into storage, and is being used.

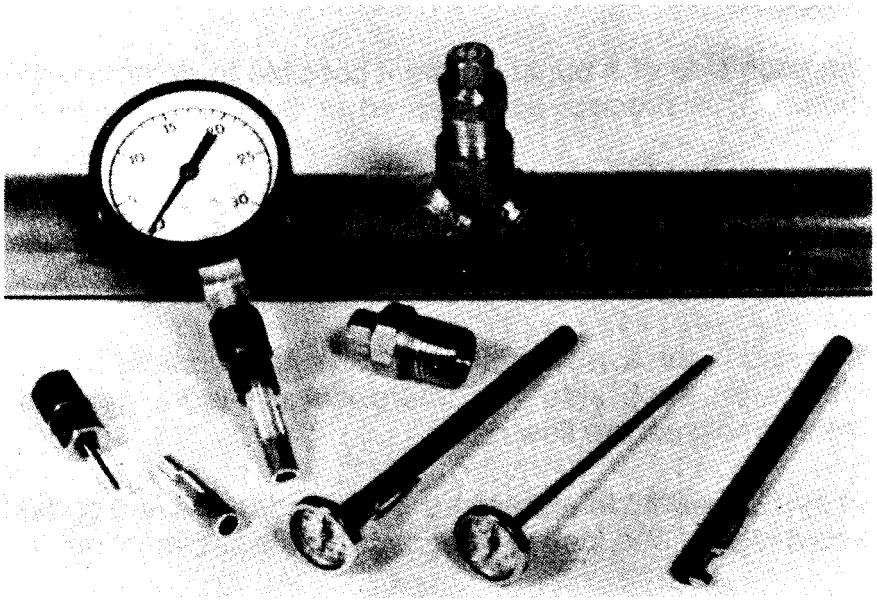

Courtesy of SISCO

FIGURE 2-51
Insertion
Thermometers with
PT Plugs

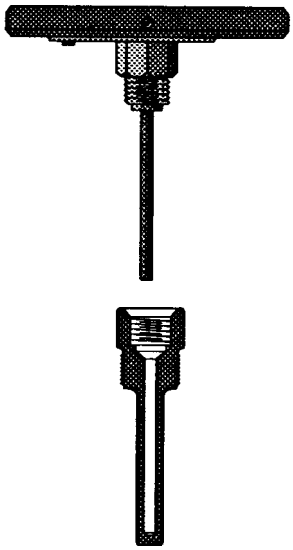

FIGURE 2-52
Thermometer with
Instrument Well

Other candidates for temperature measurement include the feed and return of the auxiliary systems, the feed and return of space heating distribution loops, and the points measured by differential thermostat sensors.

Pressure

Pressure measurement is necessary in the collector loop of closed-loop systems. It is the only practical way to confirm that there is adequate solar fluid for proper operation.

Measuring the pressure on each side of a pump makes it possible to determine the flow rate through the pump. This process is explained in Section 3.1.4 in the inspection, chapter.

Differential pressure measurements can also describe flow rates through heat exchangers, collectors or other components, if the manufacturer can supply flow rate vs. pressure drop information. (Figure 2-53)

Specialized flow setting devices use a restriction of known characteristics with pressure measurement ports on each side. A differential pressure gauge is normally used to determine and help set the flow rate.

Occasionally, a draindown system will have a pressure gauge in the drained portion of the collector loop. On cold nights, one look at the gauge tells whether or not the water has drained.

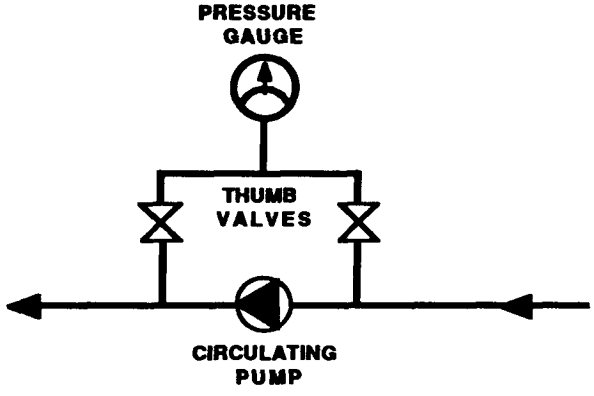


FIGURE 2-53
A Single Pressure Gauge for Measuring Pressure on Either Side of a Pump

Other Devices

Elapsed time meters are sometimes used to help predict service intervals, and confirm proper control operation.

BTU meters combine temperature differential and flow rate measurements to calculate heat flow. These are generally used for monitoring purposes. (Figure 2-54)

Indicator lights are normally included on the differential thermostat to show the availability of power and when power is being sent to the pumps. Sometimes, remote lights and temperature displays are added to the control to make checking on the system more convenient.

Pressure alarms have been used to alert service personnel to the need for service in closed-loop systems. They are not currently in general use.

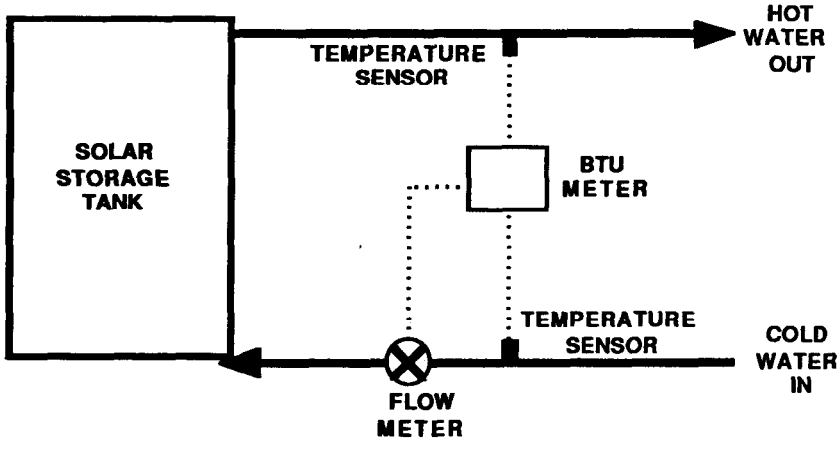


FIGURE 2-54
A BTU Meter System

## 2.8 Questions for self-study

Instructions: Choose the one answer you believe is correct. Answers to questions are in Appendix F.

2-1 Which of these is a closed loop?

a) The water storage loop of a glycol-based solar system
b) A recirculating domestic hot water system
c) A draindown system's collector loop
d) A collector loop filled with synthetic oil

2-2 Which of these is used to stop reverse thermosiphoning in the collector loop?

a) A pump
b) A backflow preventer
c) A check valve
d) An expansion tank

2-3 Which one of these systems uses an expansion tank in the collector loop?

a) A closed-loop system
b) A drainback system
c) A draindown system
d) A pool heating system

2-4 Which one of these systems uses a collector loop control valve in the collector loop?

a) A closed-loop system
b) A drainback system
c) A draindown system
d) A pool heating system

2-5 The "greenhouse effect" describes which characteristic of glass?

a) It reflects most of the short and long wave radiation
b) It lets short wave radiation through better than long wave
c) It allows light through, but not heat
d) It only allows radiation good for plant growth through

2-6 Which of these is a toxic solar collector fluid?

a) Distilled water
b) Ethylene glycol
c) Propylene glycol
d) Synthetic oil

2-7 Which one is required for a heat exchanger using a toxic fluid to heat domestic hot water?

a) Single wall construction
b) Double wall construction
c) Sacrificial anode
d) Stainless steel bonnets

2-8 Which of these types of storage tanks will always require a sacrificial anode?

a) Cement lined
b) Phenolic resin lined
c) Glass lined
d) Stone lined

2-9 The high point of a glycol-filled collector loop must have which one of the following?

a) An automatic air vent
b) A manual air vent
c) A vacuum breaker
d) An expansion tank

2-10 Where should an expansion tank be placed in a closed loop system?

a) On the inlet side of the heat exchanger
b) On the inlet side of the collectors
c) On the inlet side of the pump
d) It can be placed anywhere in the loop

2-11 Which type of insulation can be used anywhere on a solar system and does not require moisture protection?

a) Elastomeric
b) Fiber glass
c) Urethane foam
d) Polystyrene

2-12 When the temperature of a typical 10K thermistor goes up, what happens?

a) Its resistance increases
b) Its resistance decreases
c) Its voltage increases
d) Its voltage decreases

2-13 What is a device with two temperature sensors and a flow meter called?

a) A differential thermostat
b) An aquastat
c) A proportional control
d) A BTU meter

# 3.0
# INSPECTION

What You Will Find in This Chapter.

This chapter covers solar system inspection procedures and features a checklist for inspectors. Repair and maintenance information is not in this chapter. These subjects are covered in their own chapters, 5 and 6, respectively.

This chapter, by itself, should provide information required for an Annual Control Inspection. This chapter together with Chapter 6, Preventative Maintenance, provides information needed for a Preventative Maintenance Inspection. Two checklists are included at the end of this chapter for use in the field.

The information in Appendices A, B and C will be helpful in performing the operations described in this chapter. Appendix C describes the tools which may be required. In addition, bring the maintenance and operation manual furnished with the system, if it is available.

Introduction

Inspection is an important part of any solar service effort. A system inspection should be made once a year. Ideally, it is done either in the spring or fall to spot problems before the weather extremes of summer and winter arrive.

In some cases, inspections are done independently, to determine maintenance and repair needs. In other cases, inspection and maintenance are performed simultaneously. In general, they are done together if personnel qualified and equipped to perform maintenance and simple repairs are performing the inspection.

Remember, information on repairing or maintaining these components is found in Chapters 5 and 6.

## 3.1 INSPECTION PROCEDURES

The following sections are in the same order as the Inspection Checklist near the end of this chapter. It is suggested you read through the procedures before using the checklist. This will reduce confusion about what the checklist requires.

### 3.1.1 Solar Collectors,

Glazings

Collector glazings should be unbroken, clean and without internal condensation.

A broken glazing has a serious effect on collector performance, and should be repaired immediately. The interior of the collector must be protected from the weather.

**WARNING!**

Even without a glazing, the absorber plate can be hot enough to cause serious burns.

CAUTION

If you cover the broken collector with plastic, be sure to support it well enough to keep it from sagging and touching the absorber plate. Even without a glazing, the plate can get hot enough to melt the plastic onto the plate. Consider using an opaque plastic such as black.

The system can remain operational, unless an object which broke the glazing also hit the absorber plate hard enough to cause a leak.

Whenever a broken glazing is found, and no obvious cause exists, check the collector frame dimensions carefully. An out-of-square or otherwise faulty collector will repeatedly break glazings during hot weather.

Normally, glazings are cleaned by periodic rain and snow. If precipitation is infrequent, air quality is poor, or a building component (such as an exhaust fan or a chimney) deposits materials on the glazing, a regular schedule of cleaning should be established.

**WARNING!**

Never clean tempered glass glazings by hosing them off with water, unless they are cool. The rapid cooling and thermal contraction of the glass may cause them to shatter.

Some brands of evacuated tube collectors use polished metal reflectors under the tubes. These should also be checked for dust, leaves and other materials.

The underside of glazings should also be checked for water condensation and outgassing. Condensation is typically spread unevenly on the underside of the glazing. (Figure 3-1) It usually indicates a leak in the glazing gasket system or the collector frame. In some cases, an absorber plate leak may be the cause of the problem. If this is suspected but not obvious, remove the glazing to check the absorber plate.

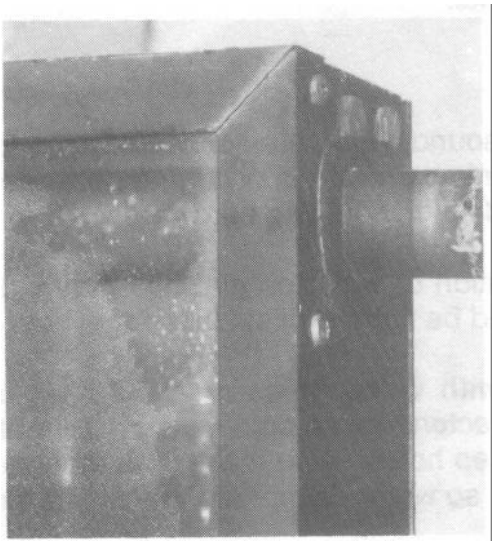

FIGURE 3-1
Condensation on a Collector Glazing

Occasionally, sealants, gaskets or even subcomponent labels will outgas. This process, akin to vaporization, results in gases inside the collector frame. They condense on cold surfaces. Unfortunately, this includes the inside of the glazing.

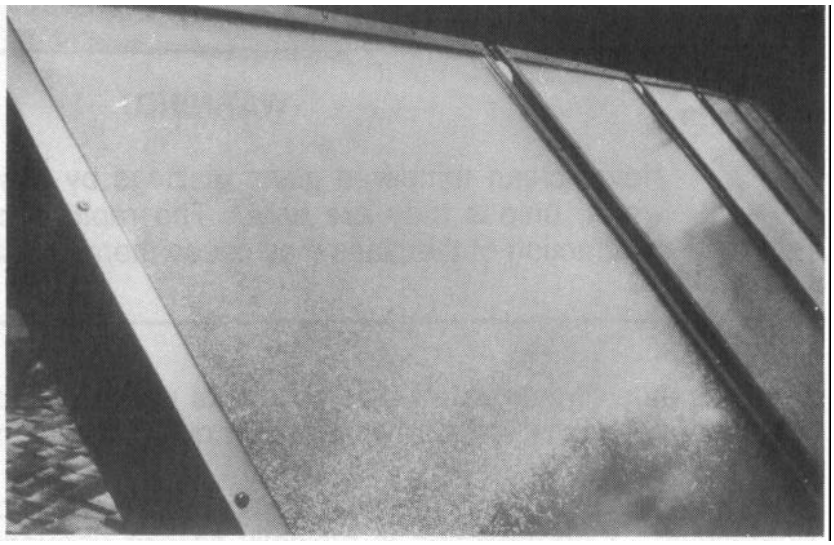

Figure 3-2: Outgassed Material on a Collector Glazing

Outgassed material usually forms a uniform cloud or haze on the inside of the glazing. (Figure 3-2) When this is found, it is usually best to do nothing about the problem for six months to be sure whatever material has outgassed is completely gone. If the problem reoccurs, one collector should be dismantled to determine the source of the outgassed material.

## Frames

Frames should be physically sound, with no evidence of paint loss or other surface damage. Make sure no galvanic corrosion is occurring between aluminum collector frames and steel or galvanized steel mounting hardware.

As indicated above, condensation of water on glazings may indicate gaps in frame joints. All collector joints should be tight, with sealant or gaskets in good condition.

Some collectors are made with weep holes to allow moisture and outgassed materials to escape. If the collectors are so equipped, check that collector insulation has not shifted to block the weep holes. Also make sure that weep holes are on the bottom or back of the collector, so water cannot run into the frame. (Figure 3-3)

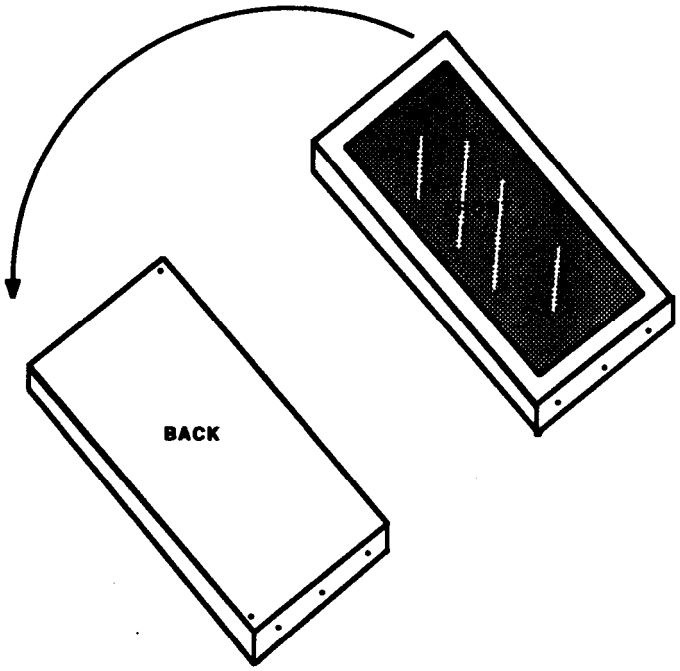


FIGURE 3-3
Collector Weep Hole
Locations

Seals Grommets and Gaskets

Loose, degraded or broken collector seals reduce performance by letting cold outside air move through the collector, or by admitting water which clouds the glazing.

Check pipe grommets by looking through the glazing, not by removing pipe insulation. A gray or brown haze in the corners of the glazing indicates an outgassing grommet or frame comer seal. They may break down to the point they can no longer seal properly.

Water droplets on the underside of the glazing in the corners is a sure sign that either the grommet or the frame corner seal is breaking down.

The glazing gasket should still be compressed by the glazing cap strips. Some collectors use a glazing gasket with a gap which can open up over time. A brown or gray fog around the perimeter of the glazing indicates an outgassing glazing gasket.

## Interior Insulation

Make sure that interior insulation is not damaged by moisture, side wall insulation is still in place and the insulation is not blocking any weep holes.

If significant amounts of moisture have entered the frame (enough to stain the absorber plate), and fiber glass insulation is used in the collector, it is a good idea to dismantle the collector. Check if the insulation has dropped and compressed behind the absorber, leaving an uninsulated area.

An overall brown fog on the glazing may indicate outgassing from insulation materials. Again, it is best to leave this unattended for six months before cleaning the glazing. If the problem reoccurs, dismantle the collector and find the cause of the problem.

## Mounting Hardware

Check if all mounting hardware connections are tight. Confirm that the connection to the building is still secure. Make sure no galvanic corrosion has occurred between mounting hardware, collectors, building components, piping and pipe hangers.

## Lightning Protection

If lightning protection has been provided for the collector array, check that all lightning rods are still in place and upright, wiring connections are secure and the ground rod(s) are still secure and in good condition.

Make sure all collectors are under the “cone of protection” of the lightning rods, that is, within the perimeter of installed lightning rods.

## Frame Grounding

Make sure every collector with a sensor is adequately grounded. This is done using a bare section of 12 or 14 gauge copper wire. One end is hose clamped to the collector outlet piping. The other end is mechanically secured to the collector frame using the mounting hardware. (Figure 3-4)

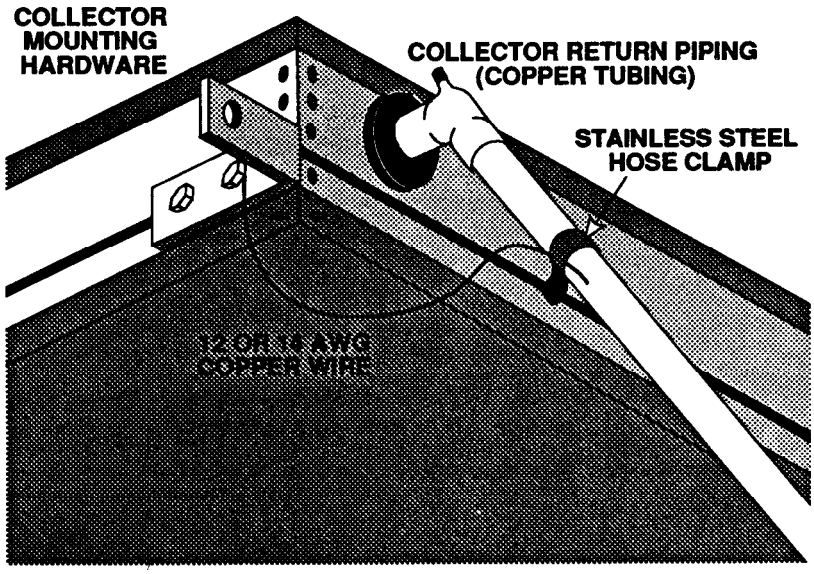


FIGURE 3-4
A Property Grounded
Collector

Make sure galvanic corrosion has not degraded the connection at the frame end of the wire. Although this corrosion is a liability, it is more than offset by the number of controls saved by collector frame grounding.

Collector Flow Rates Balanced

Use existing thermometers, existing thermometer wells and a thermometer, or a contact thermometer (contact pyrometer) to measure the outlet temperatures of each collector group in the array.

These temperatures should all be within five degrees of each other. Higher temperatures indicate flow rates lower than the rest of the array. Lower temperatures indicate higher flow rates.

Be aware of changing solar conditions while testing large arrays. Many collectors respond to changes in solar levels in less than one minute. It may be necessary to check the outlet temperatures two or three times to be sure.

WARNING!

Valves must never be installed in a way that could allow the isolation of the solar collectors from pressure relief valves and/or expansion tanks. Collectors have been completely destroyed by bursting in this way.

## Air Vents

Automatic air vents can be used only in piping loops containing water. When used with solar fluids, an automatic air vent will eventually vent enough fluid vapor or leak enough to render the system inoperative. (Figure 3-5)

FIGURE 3-5
An Automatic Air Vent

*Courtesy of Bell and Gossett*

The high points of closed-loop systems containing solar fluids must be vented, but with manual (coin) vents (Figure 3-6). The vent should be a simple needle valve, with absolutely no plastic seals, seats, wafers or other non-metal components. During installation and maintenance procedures, service personnel can open the valve to check for air or to let it out. Otherwise, the vent stays closed.

The high points of draindown and drainback collector loops, and the high point of storage water loops should use a high-pressure automatic air vent. Confirm that the vent is capable of handling at least 125 PSI, although 150 PSI is better. Check the pressure relief valve setting to ensure protection for the vent.

*Courtesy of Bell and Gossett*

FIGURE 3-6
A Manual Air Vent

The cap on automatic air vents must not be fully tightened. It is there only to prevent the entry of dust which would clog the mechanism. The vent must be installed vertically.

The air vent should be constructed of metal. Plastic air vents are not recommended because catastrophic failure is common. If a plastic vent is found, make a note on the inspection worksheet and schedule the vent for replacement.

Sensor Wires

Check sensor wires for ultraviolet (UV) degradation. They should be secure and make a watertight connection where they pass through the roof. They should not be near sharp edges, or line voltage wiring or loads. Avoid sharp bends.

Make sure the connection to the sensor is still electrically sound and the connectors are watertight.

The sensor wires must not be in contact with collector loop piping. They may be fastened to the outside of pipe insulation, and can be under the insulation jacket. They must never be between the insulation and the piping, or damage will result.

Collector Sensor(s)

The thermistor sensor used for measuring the actual collector temperature by the differential thermostat must be securely mounted to the absorber plate, or the collector outlet piping. It must be in good thermal contact with the absorber or outlet

piping, and within 1 inch of the collector housing. (Figure 3-7)

Snap switch sensors, used for signaling the approach of freezing temperatures in draindown systems are usually installed in the lower, colder, sections of the collectors. Some freeze sensors may be installed on exterior piping.

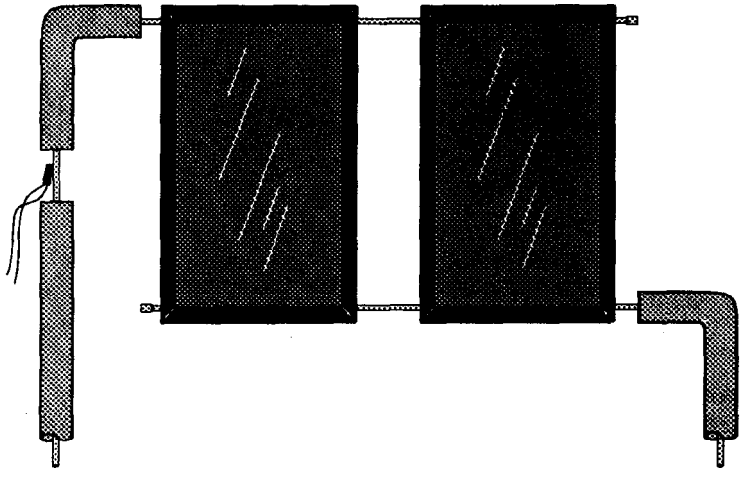

FIGURE 3-7
Poor Sensor Placement and Improper Insulation Coverage

Finally, sensors must be covered thoroughly with insulation, so they sense the absorber or pipe temperature, not the air temperature. Actual sensor testing is covered in Section 3.1.7.

### 3.1.2 Exterior Piping.

Leakage

Joint leakage may not be immediately obvious in exterior piping. Leaking fluid may be trapped or absorbed by the insulation. Incorrectly used automatic air vents may have allowed vaporized solar fluid to escape slowly enough to leave no evidence of a leak.

CAUTION

Unless a component is specifically for use in solar heating systems, confirm that body materials, construction, seals and gaskets are appropriate for the solar fluid being used and the highest potential temperatures and pressures for the system. As an example, most of the standard gate valve packings are quickly degraded by synthetic oils. The inevitable result is a loss of fluid leading to more serious consequences.

If the collector fluid is water, it may leak slowly enough that it evaporates as fast as it escapes. If the collectors in a drainback system are not filled at the time of inspection, no leakage can be detected.

Therefore, look for evidence of leakage as well as actual leaks. Stained roofs, insulation or collectors provide some clues. It may be necessary to remove insulation (carefully by section) to determine the exact leak location. In some cases, good collectors may seem to have an internal leak when an adjacent joint sprays fluid past a grommet and into the frame.

CAUTION

The common practice of hydrostatic pressure testing is not acceptable for systems filled with either synthetic or silicone oils. Never put water into piping used for oils.

Insulation

Inspect all exterior insulation carefully. Missing insulation has a significant negative effect on system performance. Every inch of piping, including capped-off collector stubs and connections between collectors, must be insulated.

If the insulation is flexible elastomeric (e.g., Armaflex™ or Rubatex™), make sure it is completely painted. Without a protective coating of paint, elastomers will degrade within. months from the UV radiation of the sun. Waterproofing is not needed with elastomeric insulations.

Fiber glass and rigid foam insulations must be jacketed to protect against penetration by snow and rain as well as UV radiation. Make sure the insulation jacket is complete and in good condition. Insulation joints should still be watertight. The ends of insulation should butt snugly against the collector frames and the joint should be sealed with silicone sealant or the equivalent. (Figure 3-8)

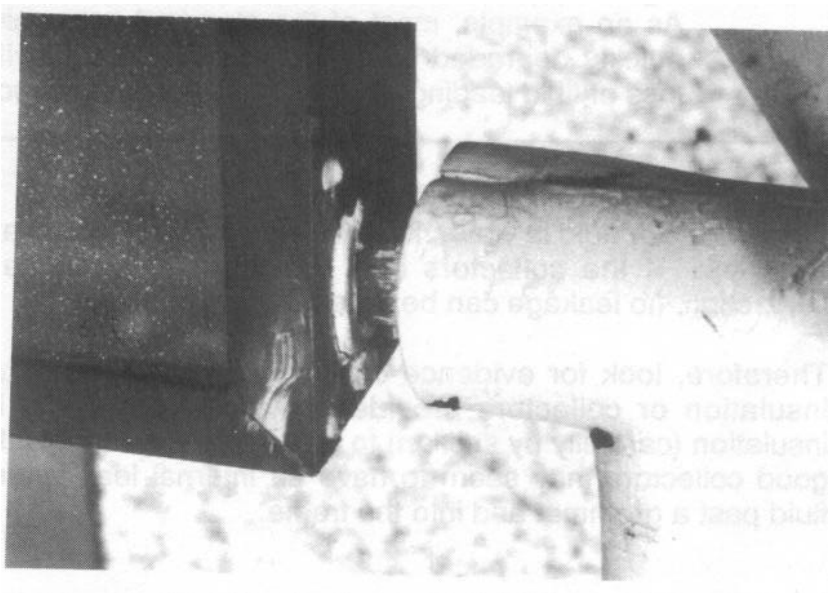

FIGURE 3-8
Shrunken Insulation
Exposing Pipe

The appearance of pipe insulation is another important consideration. Nothing detracts from an installation more than ragged, deteriorating pipe insulation. It is also an indication that there has been, or will be, a problem.

Hangers

It is important to check for loose pipe hangers, since increased damage can happen to loose piping. This is critical in exterior piping runs subject to any foot traffic, with the greater chance of vandalism or casual contact. The greater the stress on the piping, the greater the chance that leaks will develop.

### 3.1.3 Interior Piping.

Leaks, Insulation and Hangers

Inspect interior piping for loose or missing insulation and hangers and leakage. Follow the information in the preceding section for insulation, hangers and leaks.

Interior piping does not require protection against water and UV radiation damage. However, some jacketing is usually applied to keep insulation in place, protect it from physical damage and improve its appearance.

Bypass and Balancing Valves

The configuration of flow balancing and bypass valves should be compared against the system's operation and maintenance manual. Some systems have tags or labels at each valve handle to indicate the appropriate position for various situations.

If neither source of information exists, it will be necessary to trace the piping to check valve positions. Use pumps and check valves for clues to flow directions. Note missing tags on Inspection Worksheet.

Tempering Valves

Whenever possible, check for proper tempering valve operation. This can only be done when the outlet temperature of the tank preceding the valve is hotter than the valve setting.

To check, run hot water from a fixture until the temperature stabilizes and measure the temperature. Tempering valves are normally used only on DHW systems, and the water temperature at the fixture should be within five degrees of 120°F.

Pressure Relief Valves

Pressure relief valves must be used on the collector loops of closed-loop solar systems. Look for evidence of leakage or blowoff, and properly installed discharge piping. Large systems may discharge into a bucket or drum, to save the solar fluid after discharge.

**WARNING!**

A pressure-only relief valve must not be used on tanks or any other pressurized city water piping. A combination temperature and pressure relief valve must be used for these applications.

## Pressure and Temperature Relief Valves

Pressure and temperature relief valves must be used on pressurized storage tanks and other city water lines of all systems. Look for evidence of leakage or blowoff, and properly installed discharge piping. Local code may require piping of discharge to drains or outside the building, and the system should be in compliance.

> CAUTION
>
> A temperature and pressure relief valve must not be used in the collector loop of closed-loop systems. The valve will inevitably open at some time, causing a loss of solar fluid.

## Expansion Tanks

Check expansion tanks with diaphragms in closed-loops by very briefly depressing the Schrader valve. If any fluid comes out, the diaphragm is leaking and the tank must be replaced. (Figure 3-9)

> NOTE
>
> Repeated testing of diaphragm-type expansion tanks as described above will eventually release enough air to interfere with proper operation. Whenever the fluid is removed from the loop, the air pressure of the tank should be measured and necessary air pumped in.

> CAUTION
>
> Whenever an expansion tank is installed in a loop with a pump, it must be on the suction side of the pump. Installation of an expansion tank on the discharge side of the pump can result in pump cavitation and damage.

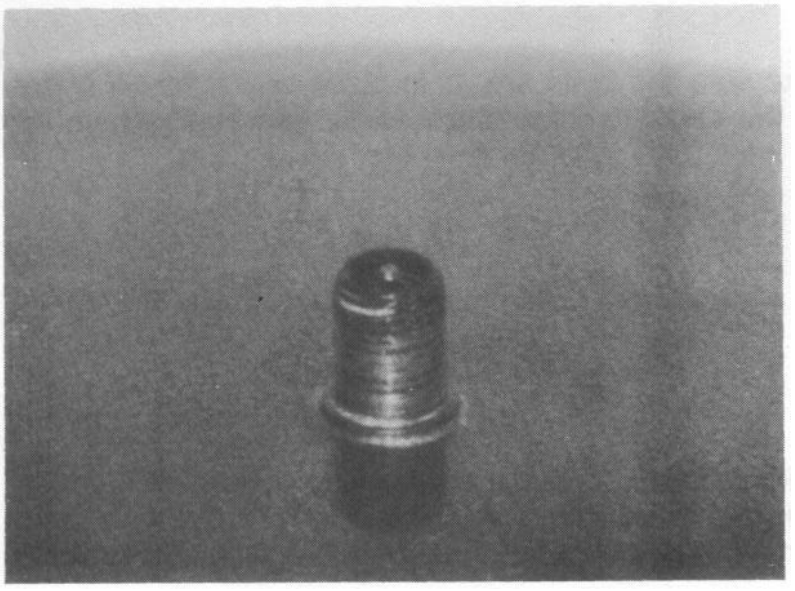

FIGURE 3-9
Schrader Valve on a
Diaphragm-Type
Expansion Tank

Tanks without diaphragms usually include a sight glass to determine the fluid level. Depending on system pressure, about half the tank volume should be air.

Pressure Reducing Valves

Glycol-filled loops must not be equipped with automatic water make-up systems. Over time, enough water can enter the loop as glycol leaks out for freezing damage to occur to outside components.

### 3.1.4 Pumps.

Electrical Connections

Make sure all wiring, conduit and junction boxes are securely fastened. All wire connectors and cover screws should be in place and tight. Turn shutoff switches or breakers off and on to check them. Confirm that the pump motors are properly grounded, either by visually checking, or by using an ohmmeter.

Piping Connections and Seals

Check all pump ports for sign of leakage or corrosion, both while the pump is running and when it is off. Look for leakage at the body seal on wet rotor pumps and the shaft seal of external motor pumps.

If the pump has flanges, make sure the bolts are all in place and tight. If it has isolation flanges, make sure the shutoff valves close easily and check them for leakage.

Support

Make sure all pump supports are securely fastened to the building and the pump. Check for corrosion as well.

Flow Rate

If a pump's loop includes a direct-reading flow meter, use it to determine the loop flow rate. Compare it to the flow rate called for in the system's operation and maintenance manual. If no manual exists, check the flow rate against those listed in Appendix B.

If the loop includes a flow-setter with ports for measuring pressure, follow the instructions and charts for that unit to determine flow rate. Compare this to the system's operation and maintenance manual's listed rate, or check it against Appendix B if no system manual exists. Inadequate flow rates must be corrected if they are less than one-half of the design flow rate.

If the loop includes either a pressure gauge on each side of the pump (Figure 3-10), or a single pressure gauge with small piping and valves (Figure 3-13), determine the pressure change across the pump while it is running.

As shown in the example which follows, the pump manufacturer's published pump curve can be used to determine the flow rate. Compare this flow rate to the one called for in the system's operation and maintenance manual, or check it against those called for in Appendix B.

FIGURE 3-10
Pump With a Pressure Gauge on Each Side

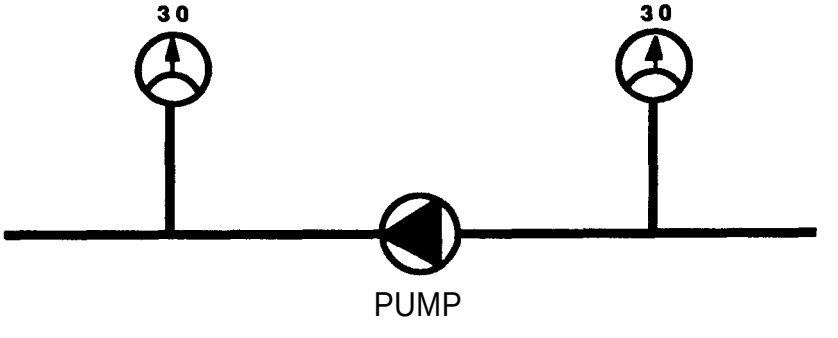

If the two gauges read the same when the pump is off (Figure 3-11), the differential pressure is simply the outlet pressure minus the inlet pressure. For example, if both gauges read 30 PSI with the pump off, and when the pump is on the outlet gauge reads 35 and the inlet gauge reads 25, the differential pressure is:

35 PSI - 25 PSI = 10 PSI

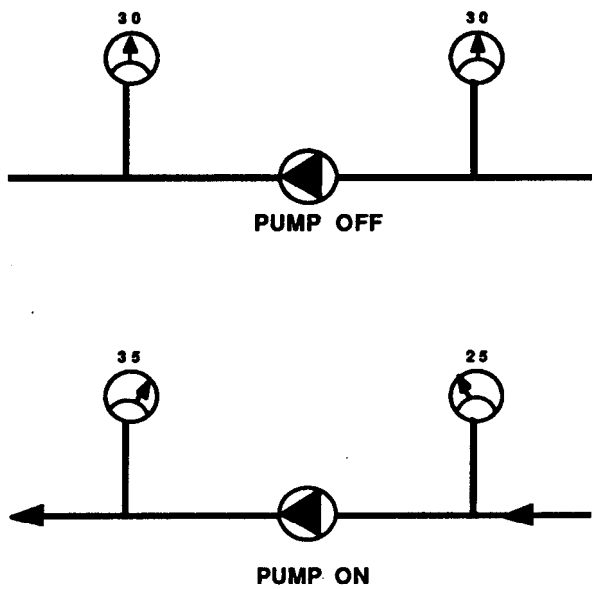


FIGURE 3-11
Calibrated Gauges
With the Pump Off
and On

However, if the gauges read differently when the system is off (Figure 3-12) and cannot be adjusted to agree, you have to add up both pressure changes. For example, at rest, the inlet gauge reads 28 and the outlet gauge reads 30. When the pump is on, the inlet gauge goes to 23, and the outlet gauge goes to 35. The total of the pressure changes is:

For the inlet gauge: 28 PSI - 23 PSI = 5 PSI

For the outlet gauge: 35 PSI - 30 PSI = 5 PSI

The total pressure change is: 5 PSI + 5 PSI = 10 PSI

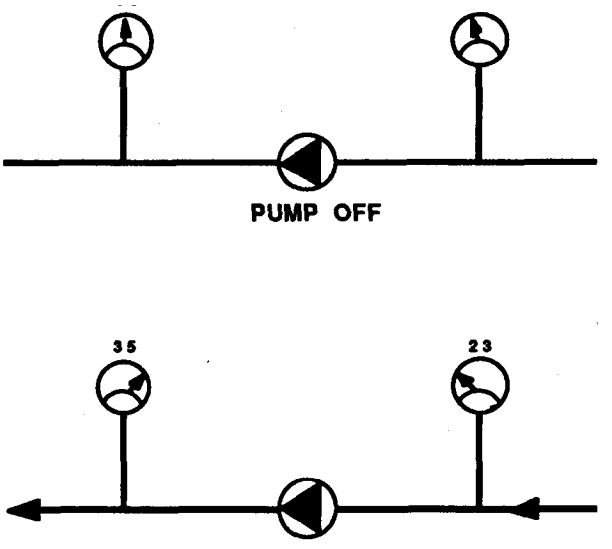


FIGURE 3-12
Gauges Out of Calibration With the Pump Off and On

If there is only one gauge, with piping and valves as shown in Figure 3-13, the pressure change is the outlet pressure minus the inlet pressure. Both pressures are measured while the pump is running.

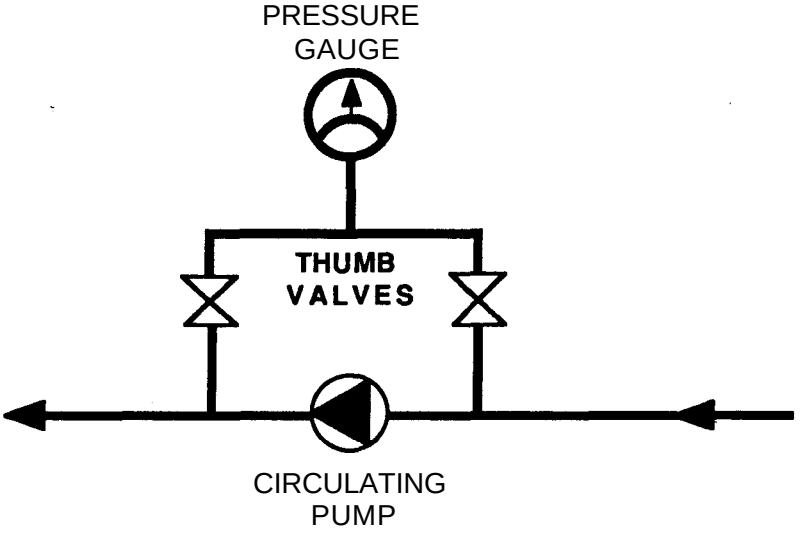


FIGURE 3-13
A Single Pressure Gauge Capable of Measuring Both Pump Inlet and Outlet Pressure

After determining the pressure change, convert it to feet of water, the usual pressure unit used on pump curves. This is sometimes called feet of head. They are the same. Multiply the PSI times 2.3 to convert to feet of water. For example, our example pump had a pressure change of 10 PSI. This is:

10 PSI x 2.3 = 23 feet of water

The final step is to use the manufacturer's pump curve to determine what flow rate the pump will provide working at that pressure change. Using Figure 3-14 as an example, the 23 feet of pressure change across the pump indicates a flow rate of about 30 gallons per minute.

NOTE

While this method is reasonably accurate, it is not perfect. As the pump impeller wears, flow rates will decline. If the pump is moving glycols or oils, there may be a considerable deviation from the published pump curve. If the flow rate is 50% higher or lower than the design flow rate, consult the fluid manufacturer for the correction factor.

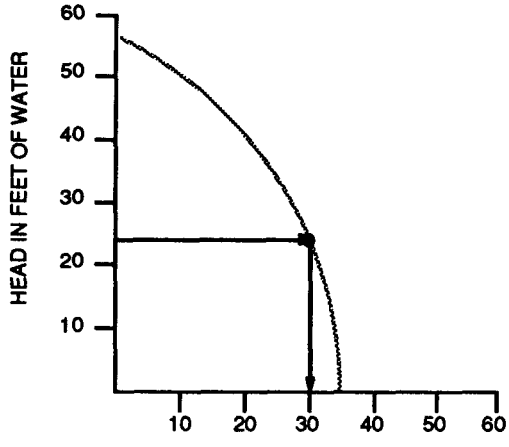


FIGURE 3-14
A Typical Pump Curve

## Lubrication

The motors of wet rotor pumps never require lubrication. External motor pumps should be checked at every inspection. If there is no way to determine lubricant levels, a regular schedule for adding oil should be established, to avoid over-oiling the motor.

## Shafts and Bearings

External motor pumps should be checked for shaft alignment and bearing wear. If the shaft is out of alignment, bearings will wear quite rapidly. Listening to the pump is one of the best ways to check these points.

## Current Draw

Another excellent way to spot pump problems is by measuring the current draw of the pump and comparing it to the manufacturer's specifications.

The following table gives a general indication of other things to inspect based on current readings. "High" and "low" refer to the pump manufacturer's specifications.

TABLE 3-1 : Current Readings and Pump Problems

| If Ammeter Reads: | Inspect for: |
|---|---|
| Zero | Power supply problem<br>Control problem<br>Relay or starter problem<br>Broken motor lead<br>Thermal overload tripped |
| Too low<br>(1/4 to 1/2 times specifications) | Motor problem<br>Broken or slipping shaft |
| Correct amount | Airbound loop<br>Closed valve, backwards check valve<br>Broken or slipping shaft<br>Direction of motor rotation |
| Too high<br>(1 1/4 to<br>1 1/2 times<br>specifications) | Misaligned shaft<br>Worn bearings<br>Foreign matter in volute<br>Impeller against volute wall<br>Motor problem |
| Much too high<br>(2 or more times specifications) | Locked rotor problem |

If the ammeter reads zero, too high or much too high, also check relay contacts for damage from excessive current draw.

### 3.1.5 Heat Exchangers.

**WARNING!**

Always confirm that a double wall heat exchanger is used whenever a toxic solar fluid is used, particularly with DHW systems. This can be determined from the nameplate.

Piping Connections and Seals

Check all heat exchanger ports for signs of leakage or corrosion. Look for loose bolts and leakage at the bonnets of shell and tube heat exchangers.

Supports

Make sure all heat exchanger supports are securely fastened to the building and the heat exchanger. Check for corrosion as well.

Flow Rate

Methods of checking flow rates are described in the preceding section, 3.1.4. Compare it to the specifications in the system's operation and maintenance manual, or check them against the rules of thumb in Appendix B.

If potable water flow rates are significantly lower than the system specifications, scale may have built up on heat exchanger passages.

It may be worthwhile to have a water hardness test performed, if water quality is not known. It may also be a good idea to visually inspect the water passages, if possible.

Temperature Change

While the system is running, check the temperatures at the inlets and outlets of all heat exchangers. Make sure the temperatures change in the appropriate directions.

During operation on a sunny day, the solar fluid entering the heat exchanger from the collectors should be higher in temperature than the fluid leaving the heat exchanger going back to the collectors.

Under the same conditions, the water leaving the heat exchanger should be hotter than the water entering from the tank.

Sacrificial Anodes

Many tube and shell heat exchangers have a sacrificial anode in the tube manifold. Check the anode by unthreading it, if it is accessible from outside the heat exchanger. If not, remove the bonnet to check it. Use teflon tape on the threads when re-installing the anode. This will aid removal for future inspections. Also, attach a note to the tank indicating the condition of the anode and the date it was last replaced, if known.

Draindown Tank/Heat Exchanger

The collector fluid reservoir of a draindown system should be inspected for leakage, corrosion and appropriate flow rates and temperature changes.

In addition, the water level in the reservoir should be checked. For most systems, this is done while the solar loop pump is off. Check with a sight glass, **a** dip stick (sometimes using a real stick!) or by simply filling the tank until it overflows when the solar loop pump is off.

3.1.6 **Solar Fluids.** Solar loops will work only if they have adequate fluid in them. Drainback reservoir tanks must be filled to the correct level. Closed-loop systems must have adequate pressure.

Check for the recommended liquid level or pressure from the system's operation and maintenance manual. If no such manual exists, Section 5.2.6 in the Repair chapter of this manual includes a chart of recommended glycol and oil fill pressures.

Water

Draindown systems use city or well water in the collector loop. If water quality is poor, water treatment equipment may be used. The product water from the treatment equipment should be checked.

Usually, water is “softened” to remove scale-causing “hardness.” Typically, this is done with ion-exchange softening equipment. Test for hardness with any standard water hardness test equipment.

Sometimes iron creates problems by building up on the inside of piping systems and reducing flow rates, and by giving the water a poor appearance and taste. Standard ion-exchange softeners, specialized iron filters or chlorine-based treatments are used to remove iron. These can all be easily checked with a test kit for total iron (both ferrous and ferric iron).

Drainback systems normally use distilled or deionized water.

Glycols

Glycol-based fluids should be checked for glycol concentration and the condition of the corrosion inhibitor. If these two cannot be checked, at least check the pH (acidity/alkalinity) of the fluid.

To check glycol concentration, some manufacturers (including Dow Chemical Company) furnish simple test kits with simple test strips and color charts (Figure 3-1 5). Another method is an optical refractometer (Figure 3-1 6). Both these methods require only a few drops of fluid and are quite simple.

To check the condition of the corrosion inhibitor, measure either the pH or the reserve alkalinity of the fluid. Most glycol manufacturers recommend that the pH should not drop below 6.0 and the reserve alkalinity should not drop below 8.0. Should either condition be too low, the fluid must be replaced or reinhibited.

To check the pH, use pH paper or tape, or have a laboratory analyze the fluid. If using pH tape, use fairly fresh tape with a pH range from 6.0 to 8.0. Water treatment specialists or swimming pool chemical suppliers are good sources for pH tape.

To check the reserve alkalinity, use a special test strip from the manufacturer, or have a lab check it. Some glycol manufacturers offer free testing for systems using large amounts of fluid (over 50 to 200 gallons).

The, color of most glycol-based solar fluids is not usually a good indicator of fluid condition. However, if the fluid appears and smells “burnt,” or has visible sludge, it should be replaced after the system is flushed out.

FIGURE 3-15
Dowfrost Test Kit

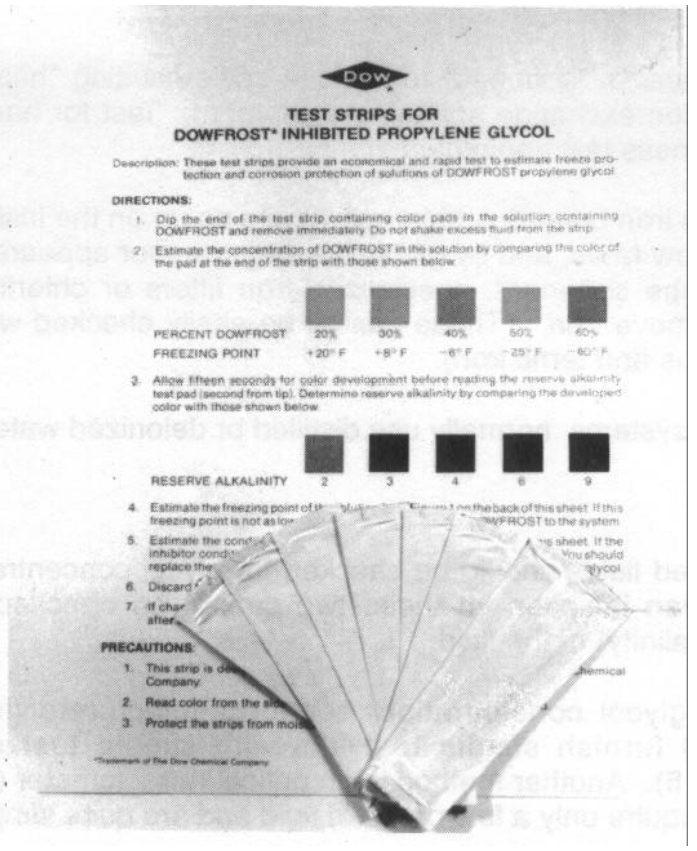

DOW

**TEST STRIPS FOR**
**DOWFROST* INHIBITED PROPYLENE GLYCOL**

Description: These test strips provide an economical and rapid test to estimate freeze protection and corrosion protection of solutions of DOWFROST propylene glycol.

**DIRECTIONS:**

1. Dip the end of the test strip containing color pads in the solution containing DOWFROST and remove immediately. Do not shake excess fluid from the strip.
2. Estimate the concentration of DOWFROST in the solution by comparing the color of the pad at the end of the strip with those shown below.

| PERCENT DOWFROST | 20% | 30% | 40% | 50% | 60% |
|---|---|---|---|---|---|
| FREEZING POINT | +20° F | +8° F | −6° F | −25° F | −60° F |

3. Allow fifteen seconds for color development before reading the reserve alkalinity test pad (second from tip). Determine reserve alkalinity by comparing the developed color with those shown below.

| RESERVE ALKALINITY | 2 | 3 | 4 | 6 | 9 |
|---|---|---|---|---|---|

4. Estimate the freezing point of th[illegible] on the back of this sheet. If this freezing point is not as lo[illegible] DOWFROST to the system.
5. Estimate the cond[illegible] this sheet. If the inhibitor cond[illegible] You should replace the [illegible] glycol.
6. Discard [illegible]
7. If char[illegible] after[illegible]

**PRECAUTIONS:**

1. This strip is d[illegible] Chemical Company.
2. Read color from the sid[illegible]
3. Protect the strips from moi[illegible]

*Trademark of The Dow Chemical Company

FIGURE 3-16
Optical
Refractometer

Synthetic and Silicone Oils

Oils do not require replacement or reinhibiting. However, the fluid pressure must be adequate.

Check for the recommended pressure from section 5.2.6 of this manual.

### 3.1.7 Controls,

Electrical Connections

Check all conduit and wiring connections. Make sure the system is mechanically grounded (to earth). Pay particular attention to the sensor wire connections. Make sure no small strands of wire from adjacent terminals touch each other. Such contact provides a direct short circuit which completely disrupts normal control operation.

Mounting

Be sure the control and associated conduit is securely mounted.

Controls: Jumper Method

With all sensor wires disconnected and the control switch in the "automatic" position, jumper the two terminals marked "Collector" (or "COLL," etc.) (Figure 3-17a). The solar loop pump (and water loop pump, if used) should come on.

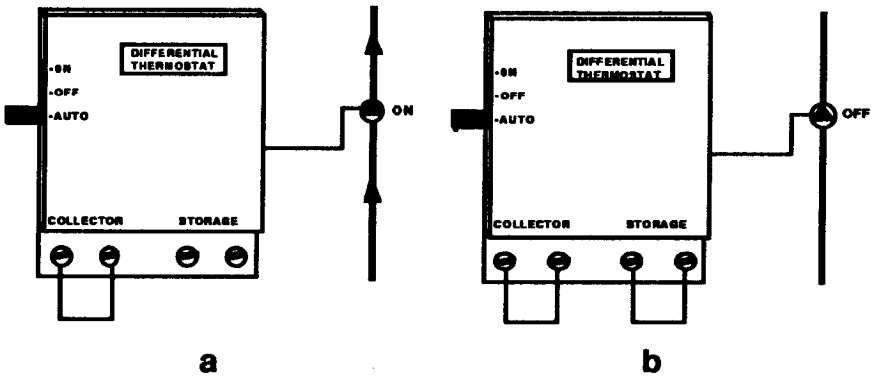


FIGURE 3-17
Checking On/Off Operation by the Jumper Method

With the collector sensor terminals shorted, jumper the storage sensor terminals marked “Storage” (or “STOR,” etc.) (Figure 3-17b). The pump(s) should go off.

To test the high limit function, first determine the brand and type of differential thermostat controlling the system. Most controls are 10K, that is their sensors have 10,000 ohms resistance at 77°F. If you have any doubt about this, refer to the system’s operation and maintenance manual. If one does not exist, remove a sensor, give it time to come to room temperature and measure its resistance with an ohmmeter.

Controls manufactured by Controlex (Natural Power), Johnson Controls, Barber Coleman, Honeywell, Robertshaw and others are not 10K differential thermostats. These controls use RTD sensors instead of thermistors. Consult the manufacturer for further information.

Heliotrope General controls may use 10K or 3K sensors. Table 3-2 contains additional information on these controls.

Determine the high limit setting of the control from Table 3-2, the control labeling or the setting of the control’s high limit adjustment dial. This dial is usually on a potentiometer, sometimes called a “pot.” (Figure 3-18)

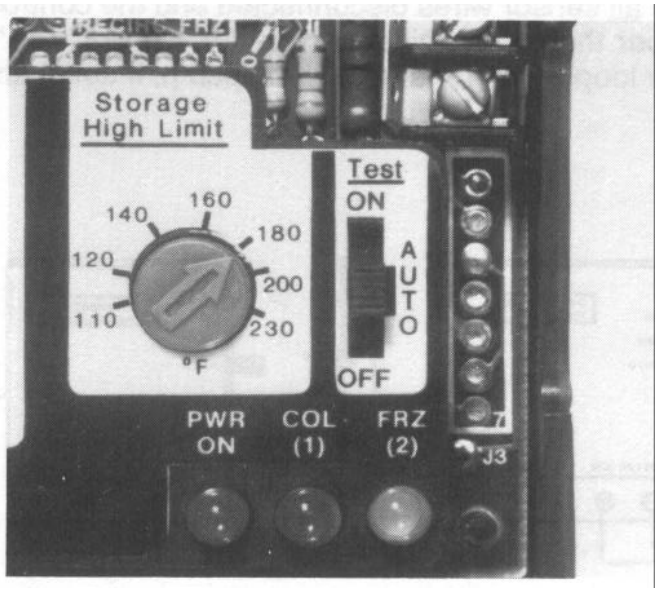


FIGURE 3-18
High Limit Dial (left) and Control Switch (right) on a Solar Control

Jumper the collector sensor terminals on the control. Once the system is running, hold the leads of an appropriate resistor against the storage sensor terminals (Figure 3-19). The system should turn off, as the control is being told the storage tank is above the high temperature.

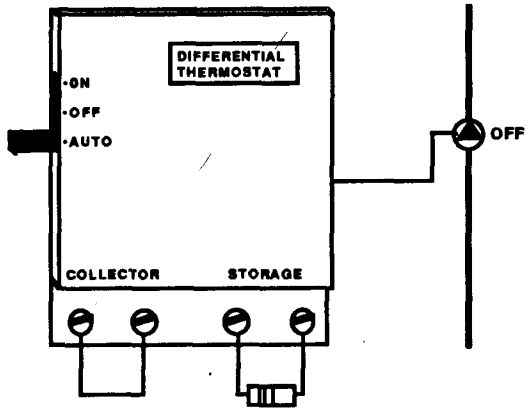


FIGURE 3-19
Checking High Limit Function With a Single Resistor

TABLE 3-2: Characteristics of Available Controls (As of January, 1988)

| Manufacturer: | Model: | Type: | On/Off: (ºF) | High Limit: (ºF) |
|---|---|---|---|---|
| Heliotrope General* | TempTrak II Series | 3K/10K | Adj: 50-100 | Adj: 80-215 |
| | DTT-64 Series | | 20/3 or 10/3 | None, 160, or 180 |
| | DTT-84/94 Series | 10K | 18/5 or 9/4 | 160 or 180 |
| | DTT-64DD | 10K | 30/3 | 180 |
| | DTT-74 Series | 10K | 20/5 or 10/5 | None, 160, or 180 |
| Independent Energy | CM30/32 | 10K | Adj: 8-24/4 | Adj: 110-230 |
| | CM-33 | 10K | Adj: 8-24/4 | Adj: 50-104 |
| | CM-50 | 10K | Adj: 15/4 to 40/20 | Adj: 60-160 |
| | C-30 Series | 10K | 20/5 or 8/3 | Adj: 105-212 |
| | C-35 Series | 10K | 4/1 or 8/3 | Adj: 62-104 |
| Pyramid Controls | All | 10K | 14/3 | 163 |
| Rho Sigma | RS504 Series | 10K | 20/3 or 12/3** | 160 |
| | RS121 Series | 10K | 20/3 | Adj: 120-220 |
| | RS360 Series | 10K | 20/3.5 | Per specification |

* Older Heliotrope General Controls are all 3K
** Proportional control: The pump motor is run at a speed proportional to the differential. This type of control is rarely used.

Use Table 3-3 or 3-4 to determine the right resistance to use to simulate a particular temperature. An abbreviated version, with resistor color codes, is presented in Table 4-3.

Controls: Tester Method

A more accurate method of testing differential thermostats is with a special tester designed for the purpose. Normally, these units have four leads or terminals. These are connected to the collector and storage sensor terminals of the control. The tester supplies a calibrated resistance to the two sensor inputs to simulate changing sensor temperatures. (Figure 3-20)

Most of the available testers supply a fixed resistance to the storage terminals and change the resistance supplied to the collector terminals. The numbers on the tester dial usually refer to the temperature difference between the storage and collector terminals.

As the tester dial is slowly turned to greater temperature differential settings, the resistance supplied to the collector sensor terminals is lowered. At the "on" differential, the control should turn on.

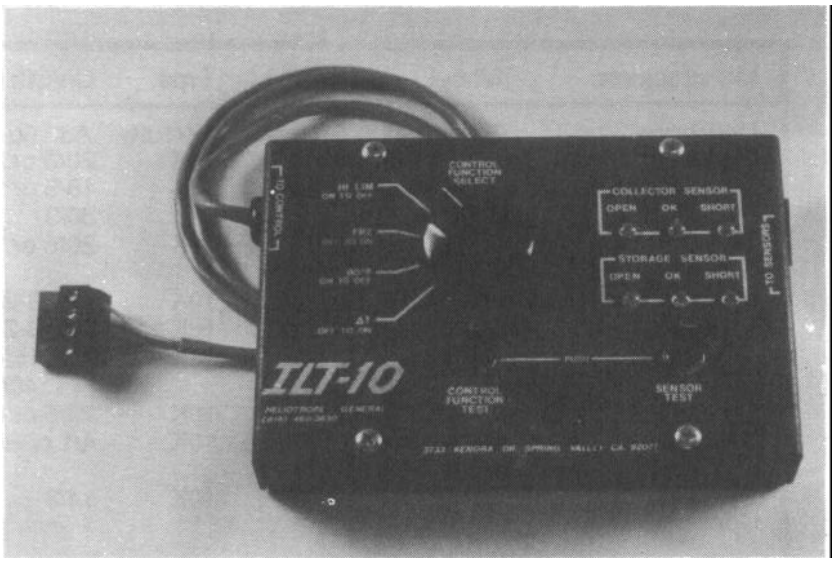


FIGURE 3-20
Solar Control
Tester

Next, turn the dial slowly downward to lower temperature differential settings. This increases the resistance shown to the collector sensor terminal, and at the “off” differential, the control should shut off.

Many testers also include a high limit test function. Generally, the tester shorts out the collector sensor’s terminals, to ensure the control is trying to run the system. Then, the resistance supplied to the storage sensor terminals is reduced, simulating a rising storage temperature. When the high limit is reached, the control should shut off.

The dials on most testers are not very accurate. If the control has a digital display, use that instead of the numbers on the tester dial. In descending order of accuracy, the dials and readouts encountered during control and sensor testing are:

| | |
|---|---|
| Most accurate: | Control digital display |
| | Digital ohmmeter |
| | Analog ohmmeter |
| | Resistor color code |
| | Control tester dial |
| Least accurate: | Control adjustment pot dials |

Sensors: For Controls Without Digital Displays

To check suspicious sensors, disconnect the wires from their terminals at the control. With all sensors removed, the control should be off when it is in the “auto” position. Leave the connections intact at the sensor for the time being. Using an ohmmeter and the appropriate temperature vs. resistance chart (Table 3-3 or 3-4), determine if the resistance of the sensor is appropriate for the temperature it should be measuring. If using an analog meter with several resistance scales, the 100 x R scale is normally the most useful.

Confirm also that the sensor resistance changes as the sensor temperature changes. This may require warming a cool sensor in your hand, or moving a sensor off a warm collector or tank into the cooler air.

CAUTION

Do not immerse sensors in warm or cold water. Most sensors are not waterproof and can be damaged with water. Resistance readings of an immersed sensor will not be correct. If temperature extremes are needed to check the sensor, wrap it in a plastic bag before immersing it in water.

Remember, most sensor's resistance goes up as temperature goes down. A temperature increase results in a resistance decrease. If the ohmmeter shows a direct short (zero ohms), or an open circuit (infinite ohms), check the sensor wiring as well as the sensor itself.

Check sensor wiring for staples shorting out the wires, loose or corroded connections and outright breaks.

Make sure sensor wiring is located away from line voltage wiring and motors. Maintain at least 1 foot from 120V wiring and at least 2 feet from 240V. It is very easy for a small electrical current to be induced in the low voltage sensor wires. This current will make normal control operation impossible.

Sensors: For Controls With Digital Displays

If the control has a digital display, leave the sensor wires connected and use the control display to check the sensors. If the displayed temperatures do not appear appropriate, disconnect the sensor wires from the control and use an ohmmeter to check the sensor.

Many digital displays indicate short or open circuits by flashing the digits on display. Again, an ohmmeter should be used on disconnected sensor wires.

NOTE

Whenever checking controls or sensors, also check to be sure the collector with the sensor is properly grounded.

Freeze Snap Switches

In some systems, one or more freeze snap switches are installed in series or parallel with the collector sensor. In others, they are part of a separate circuit. Redundant sensors in different locations provide added protection against freezing.

Multiple freeze sensors are sometimes used in parallel or series to provide redundant protection for collectors and exposed piping. Make sure they are in good thermal contact with the piping or collector components, and that they are wired correctly in series or parallel.

Be sure the freeze snap switches used with a control are made or recommended by the control manufacturer. Some switches open on a temperature drop, and others close on a temperature drop. The use of the wrong snap switch can destroy the collectors by allowing them to freeze.

TABLE 3-3: Temperature vs. Resistance in Ohms for 10K Sensors

| ºF | ºC | Resistance | ºF | ºC | Resistance | ºF | ºC | Resistance |
|---|---|---|---|---|---|---|---|---|
| 32 | 0.0 | 32,654 | 106 | 41.1 | 5,093 | 180 | 82.2 | 1,170 |
| 34 | 1.1 | 30,859 | 108 | 42.2 | 4,873 | 182 | 83.3 | 1,129 |
| 36 | 2.2 | 29,174 | 110 | 43.3 | 4,663 | 184 | 84.4 | 1,090 |
| 38 | 3.3 | 27,592 | 112 | 44.4 | 4,464 | 186 | 85.6 | 1,053 |
| 40 | 4.4 | 26,105 | 114 | 45.6 | 4,274 | 188 | 86.7 | 1,017 |
| 42 | 5.6 | 24,709 | 116 | 46.7 | 4,093 | 190 | 87.8 | 982 |
| 44 | 6.7 | 23,395 | 118 | 47.8 | 3,921 | 192 | 88.9 | 949 |
| 46 | 7.8 | 22,160 | 120 | 48.9 | 3,758 | 194 | 90.0 | 917 |
| 48 | 8.9 | 20,998 | 122 | 50.0 | 3,602 | 196 | 91.1 | 886 |
| 50 | 10.0 | 19,903 | 124 | 51.1 | 3,453 | 198 | 92.2 | 857 |
| 52 | 11.1 | 18,873 | 126 | 52.2 | 3,312 | 200 | 93.3 | 828 |
| 54 | 12.2 | 17,903 | 128 | 53.3 | 3,177 | 202 | 94.4 | 801 |
| 56 | 13.3 | 16,988 | 130 | 54.4 | 3,048 | 204 | 95.6 | 775 |
| 58 | 14.4 | 16,126 | 132 | 55.6 | 2,925 | 206 | 96.7 | 749 |
| 60 | 15.6 | 15,313 | 134 | 56.7 | 2,808 | 208 | 97.8 | 725 |
| 62 | 16.7 | 14,546 | 136 | 57.8 | 2,697 | 210 | 98.9 | 702 |
| 64 | 17.8 | 13,822 | 138 | 58.9 | 2,590 | 212 | 100.0 | 679 |
| 66 | 18.9 | 13,139 | 140 | 60.0 | 2,488 | 214 | 101.1 | 658 |
| 68 | 20.0 | 12,493 | 142 | 61.1 | 2,391 | 216 | 102.2 | 637 |
| 70 | 21.1 | 11,883 | 144 | 62.2 | 2,298 | 218 | 103.3 | 617 |
| 74 | 22.2 | 11,307 | 146 | 63.3 | 2,209 | 220 | 104.4 | 597 |
| 72 | 23.3 | 10,762 | 148 | 64.4 | 2,124 | 222 | 105.6 | 579 |
| 76 | 24.4 | 10,247 | 150 | 65.6 | 2,043 | 224 | 106.7 | 561 |
| 78 | 25.6 | 9,760 | 152 | 66.7 | 1,966 | 226 | 107.8 | 543 |
| 80 | 26.7 | 9,298 | 154 | 67.8 | 1,891 | 228 | 108.9 | 527 |
| 82 | 27.8 | 8,862 | 156 | 68.9 | 1,820 | 230 | 110.0 | 511 |
| 84 | 28.9 | 8,448 | 158 | 70.0 | 1,753 | 232 | 111.1 | 495 |
| 86 | 30.0 | 8.056 | 160 | 71.1 | 1,688 | 234 | 112.2 | 480 |
| 88 | 31.1 | 7,665 | 162 | 72.2 | 1,625 | 236 | 113.3 | 466 |
| 90 | 32.2 | 7,333 | 164 | 73.3 | 1,566 | 238 | 114.4 | 452 |
| 92 | 33.3 | 6,999 | 166 | 74.4 | 1,509 | 240 | 115.6 | 438 |
| 94 | 34.4 | 6,683 | 168 | 75.6 | 1,454 | 242 | 116.7 | 425 |
| 96 | 35.6 | 6,382 | 170 | 76.7 | 1,402 | 244 | 117.8 | 413 |
| 98 | 36.7 | 6,097 | 172 | 77.8 | 1,351 | 246 | 118.9 | 401 |
| 100 | 37.8 | 5,827 | 174 | 78.9 | 1,303 | 248 | 120.0 | 389 |
| 102 | 38.9 | 5,570 | 176 | 80.0 | 1,257 | 250 | 121.1 | 378 |
| 104 | 40.0 | 5,326 | 178 | 81.1 | 1,213 | | | |

TABLE 3-4: Temperature vs. Resistance in Ohms for 3K Sensors

| ºF | ºC | Resistance | ºF | ºC | Resistance | ºF | ºC | Resistance |
|---|---|---|---|---|---|---|---|---|
| 32.0 | 0 | 9,810 | 105.8 | 41 | 1,540 | 179.6 | 82 | 354 |
| 33.8 | 1 | 9,300 | 107.8 | 42 | 1,480 | 181.4 | 83 | 342 |
| 35.6 | 2 | 8,850 | 109.4 | 43 | 1,420 | 183.2 | 84 | 333 |
| 37.4 | 3 | 8,430 | 111.2 | 44 | 1,360 | 185.0 | 85 | 321 |
| 39.2 | 4 | 8,010 | 113.0 | 45 | 1,310 | 186.8 | 86 | 312 |
| 41.0 | 5 | 7,620 | 114.8 | 46 | 1,260 | 188.6 | 87 | 303 |
| 42.8 | 6 | 7,260 | 116.6 | 47 | 1,210 | 190.4 | 88 | 293 |
| 44.6 | 7 | 6,900 | 118.4 | 48 | 1,170 | 192.2 | 89 | 284 |
| 46.4 | 8 | 6,570 | 120.2 | 49 | 1,120 | 194.0 | 90 | 275 |
| 48.2 | 9 | 6,270 | 122.0 | 50 | 1,080 | 195.8 | 91 | 267 |
| 50.0 | 10 | 5,970 | 123.8 | 51 | 1,040 | 197.6 | 93 | 259 |
| 51.8 | 11 | 5,700 | 125.6 | 52 | 1,002 | 199.4 | 92 | 251 |
| 53.6 | 12 | 5,430 | 127.4 | 53 | 966 | 201.2 | 94 | 243 |
| 55.4 | 13 | 5,190 | 129.2 | 54 | 930 | 203.0 | 95 | 236 |
| 57.2 | 14 | 4,950 | 131.0 | 55 | 879 | 204.8 | 96 | 229 |
| 59.0 | 15 | 4,710 | 132.8 | 56 | 864 | 206.6 | 97 | 223 |
| 60.8 | 16 | 4,500 | 134.6 | 57 | 831 | 208.4 | 98 | 215 |
| 62.6 | 17 | 4,290 | 136.4 | 58 | 774 | 212.0 | 99 | 210 |
| 64.4 | 18 | 4,110 | 138.2 | 59 | 801 | 210.2 | 100 | 204 |
| 66.2 | 19 | 3,930 | 140.0 | 60 | 747 | 213.8 | 101 | 198 |
| 68.0 | 20 | 3,750 | 141.8 | 61 | 720 | 215.6 | 102 | 192 |
| 69.8 | 21 | 3,570 | 143.6 | 62 | 696 | 217.4 | 103 | 187 |
| 71.6 | 22 | 3,420 | 145.4 | 63 | 672 | 219.2 | 104 | 182 |
| 73.4 | 23 | 3,270 | 147.2 | 64 | 648 | 221.0 | 105 | 176 |
| 75.2 | 24 | 3,150 | 149.0 | 65 | 624 | 222.8 | 106 | 171 |
| 77.0 | 25 | 3,000 | 150.8 | 66 | 603 | 224.6 | 107 | 167 |
| 78.8 | 26 | 2,870 | 152.6 | 67 | 582 | 226.4 | 108 | 162 |
| 80.6 | 27 | 2,750 | 154.4 | 68 | 564 | 228.2 | 109 | 158 |
| 82.4 | 28 | 2,630 | 156.2 | 69 | 543 | 230.0 | 110 | 153 |
| 84.2 | 29 | 2,520 | 158.0 | 70 | 525 | 231.8 | 111 | 149 |
| 86.0 | .30 | 2,420 | 159.8 | 71 | 507 | 233.6 | 112 | 145 |
| 87.8 | 31 | 2,320 | 161.6 | 72 | 492 | 235.4 | 113 | 141 |
| 89.6 | 32 | 2,220 | 163.4 | 73 | 474 | 237.2 | 114 | 137 |
| 91.4 | 33 | 2,130 | 165.2 | 74 | 459 | 239.0 | 115 | 134 |
| 93.2 | 34 | 2,040 | 167.0 | 75 | 444 | 240.8 | 116 | 130 |
| 95.0 | 35 | 1,960 | 168.8 | 76 | 429 | 242.6 | 117 | 127 |
| 96.8 | 36 | 1,880 | 170.6 | 77 | 417 | 244.4 | 118 | 123 |
| 98.6 | 37 | 1,800 | 172.4 | 78 | 402 | 246.2 | 119 | 120 |
| 100.4 | 38 | 1,730 | 174.2 | 79 | 390 | 248.0 | 120 | 117 |
| 102.2 | 39 | 1,670 | 176.0 | 80 | 378 | 249.8 | 121 | 114 |
| 104.0 | 40 | 1,600 | 177.8 | 81 | 366 | | | |

### 3.1.8 Storage Tanks.

Drain Valves

Check that the drain valve on the storage tank opens and closes properly without leaking. Look for leaks at the piping connection between the valve and the tank.

Insulation

Tank insulation must be complete, dry and properly jacketed. If foam insulation has been applied to the exterior, make sure it is still in good condition.

If the tank is buried, take tank-top temperature readings one hour after the end of a solar collection day and again the next morning. During that night, bypass the tank, so any temperature loss is through the tank wall and insulation, not to a load. The overnight loss of heat on a properly insulated tank will typically result in a temperature loss of less than ten degrees Fahrenheit.

Sacrificial Anode

Unscrew and inspect the sacrificial anode in steel tanks with glass linings. The pipe dope used by the manufacturer makes the rod difficult to remove the first time. After inspection, clean this dope off the threads and use teflon tape. This will make subsequent inspections easier. Attach a note to the tank indicating condition of the anode and the date of the last replacement, if known.

Replacement of depleted anode rods is critical to the lifetime of a storage tank.

Fittings and Piping

Check all fittings for leaks and evidence of corrosion. Insulation on piping must be complete. Insulation jacketing, if used, must be intact.

Sensor and Sensor Wiring

The previous section contains information on checking the sensor on the tank. Make sure the sensor wiring is protected from physical damage and is kept at least 1 foot away from 120V wiring and at least 2 feet away from 240V wiring.

Heating Element

If the tank has a back-up electric element, be sure the sensor and back-up element wiring are separated by at least one foot.

The element must be in the upper half of the solar tank. An auxiliary heat source in the bottom of the tank would interfere with the system's ability to store solar heat.

## 3.2 SAMPLE INSPECTION CHECKLIST

An inspection checklist is shown on the next four pages. It can be copied and used directly, or it can be retyped with modifications for particular systems.

This version has two columns. If no repairs are required, place a check in the "OK" column. If repairs are needed, check the "Repair" column. Use the "Recommended Actions" section near the end for notes on necessary repairs.

After the checklist is filled out, use it to pinpoint necessary maintenance or repairs. Then file it with all the other system inspection sheets, or with the operation and maintenance manual for that system.

Solar System Inspection Checklist

Site/Location: _____ Date: _____

_____

## Collectors

OK Repair

___ ___ Glazings unbroken, clean (Do not clean when hot!)
___ ___ Frames tight, no evidence of corrosion, square
___ ___ Seals and gaskets not deteriorating, complete
___ ___ Interior insulation in place, dry, not deteriorating
___ ___ Mounting hardware secure to collectors and roof, tight
___ ___ Lightning protection, if used, is secure
___ ___ Frame grounded to absorber piping
___ ___ Flow rate balanced throughout array
___ ___ Sensor wires secure
___ ___ Sensor secure, in good contact with absorber plate
___ ___ Collectors unshaded, no new growth of trees or bushes

## Exterior Piping

OK Repair

___ ___ Insulation complete, weatherproof, secure
___ ___ Hangers supporting piping properly without stress
___ ___ No evidence of leakage

Interior Piping

OK Repair

___ ___ Insulation complete, secure
___ ___ No evidence of leakage
___ ___ Valves in correct positions*
___ ___ Hangers supporting piping properly without stress

Pumps

OK Repair

___ ___ Electrical connections secure
___ ___ Piping connections secure, no evidence of corrosion
___ ___ Pump properly supported
___ ___ Flow rate in appropriate range*
___ ___ Adequate lubrication supplied (dry rotor pumps only)
___ ___ Current draw is appropriate*

Heat Exchanger

OK Repair

___ ___ No evidence of corrosion at fittings (check bonnet)
___ ___ Piping connections secure
___ ___ Anode in water manifold present
___ ___ Temperature differences appropriate*
___ ___ Water level in drainback tank, if used, correct*

* Check the system's operation and maintenance manual, or this manual's appendices for more information.

Closed-Loop Fluid, if used

OK Repair

Adequate pressure*
Glycol pH, alkalinity and concentration acceptable
Make-up water supply, if present, shut off and tagged

Control

OK Repair

___ ___ Electrical connections secure
___ ___ Control securely mounted
___ ___ On/off differentials correct*
___ ___ Sensor wires secure, unbroken, not shorted
___ ___ 120/240 VAC wiring at least one foot from sensor wires
___ ___ Sensor resistance appropriate*
___ ___ Cable shield, if used, grounded to cabinet only

Storage Tanks

OK Repair

___ ___ Drain valve opens and closes properly
___ ___ Insulation complete, tight, dry
___ ___ No evidence of leakage
___ ___ Dielectric fittings where needed, no corrosion
___ ___ Sensor wires secure
___ ___ Sensor secure, in good thermal contact with tank wall
___ ___ Heating element wiring, if used, is secure
___ ___ T & P not blowing off, load still using heat

*Check the system's operation and maintenance manual, or this manual's appendices for more information.

Paperwork

OK Repair

___ ___ Operation and maintenance manual for system on site or available
___ ___ Flow diagram and sequence of operation on site or available
___ ___ Service record for system on site or available
___ ___ Photographs taken and placed in service record
___ ___ This inspection record filed in service record

Recommended Actions. if any:

_____
_____
_____
_____

Notes:

_____
_____
_____
_____

Inspected by: _____

Approved by: _____

## 3.3 SIMPLIFIED INSPECTION PROCEDURES FOR SMALL SYSTEMS

When many small systems are to be inspected, such as domestic hot water systems on military family housing units, a simpler inspection procedure can be used to reduce the inspection time per system.

These inspection procedures are less detailed and cover fewer items, but are adequate to turn up most service needs. It is important to complete all the inspection tasks for all the systems, and to remain alert for defects which are not specifically listed.

Notice that the last section of the checklist can be performed at another time, when inspection personnel are on top of the building to inspect roofs.

DHW System Inspection Checklist

Site/Location: Date:

_____ _____

_____ _____

Collectors (Inspect from the ground)

OK Repair

___ ___ Glazings unbroken, without condensation or outgassing
___ ___ Piping insulation complete, jacket in acceptable condition
___ ___ No evidence of fluid leakage
___ ___ Piping hanging or supported properly

Interior Piping

OK Repair
___ ___ Piping insulation complete, jacket in acceptable condition
___ ___ No evidence of fluid leakage
___ ___ Piping hanging or supported properly
___ ___ Valves all in correct positions*
___ ___ When pump is running, pump sounds appropriate
___ ___ No gurgling noises in piping, except for filling and draining draindown and drainback collector loops
___ ___ Pressure of closed loops appropriate*
___ ___ Pressure relief valve on closed loop installed and discharge properly piped
___ ___ Glycol concentration, pH and alkalinity acceptable

* Check the system's operation and maintenance manual, or this manual's appendices for more information.

Control and Wiring

OK Repair

___ ___ Sensor wiring secured
___ ___ Line voltage electrical connections all secure
___ ___ Control operates correctly when tested with jumpers or control tester*
___ ___ Pump turns on and off properly during control test
___ ___ Sensor resistances appropriate*

Storage Tank

OK Repair

___ ___ Drain valve opens and closes properly
___ ___ No evidence of leakage or corrosion
___ ___ T & P valve installed and discharge properly piped

Collectors and Exterior Piping (to be done when climbing to roof for other purposes)

OK Repair

___ ___ Glazings unbroken, clean (Do not clean when hot!)
___ ___ Frames tight, no evidence of corrosion, square
___ ___ Mounting hardware secure to collectors and roof, tight
___ ___ Lightning protection, if used, is secure
___ ___ Frame grounded to absorber piping
___ ___ Sensor wires secure
___ ___ Collectors unshaded, no new growth of trees or bushes
___ ___ Insulation complete, weatherproof, secure
___ ___ Hangers supporting piping properly without stress
___ ___ No evidence of leakage

* Check the system's operation and maintenance manual, or this manual's appendices for more information.

## 3.4 Questions for Self-study

Instructions: Choose the one answer you believe is correct. Answers to questions are in Appendix F.

3-1 What does “outgassing” in a solar collector look like?

a) Gummy deposits on the absorber plate
b) Uneven droplets on the glass
c) A uniform cloud or haze on the inside of the glass
d) A degraded absorber coating

3-2 What do weep holes do?

a) Let out excess fluid pressure from the collector loop
b) Keep the collector loop pressure high enough
c) Let moisture out of the collectors
d) Keep moisture from entering the collectors

3-3 What size wire should be used to ground the collector frames?

a) 10 AWG or larger
b) 12-14 AWG
c) 14-20 AWG
d) 20 AWG or smaller

3-4 Where should the thermistor sensor used on the collector be installed?

a) On the collector outlet piping
b) On the collector inlet piping
c) On the inlet piping
d) In the air, shaded by the collector

3-5 What must be done to elastomeric pipe insulation used outside?

a) Jacket it
b) Waterproof it
c) Paint it
d) Nothing

3-6 Pressurized solar storage tanks must have which one of these?

a) Backflow preventer
b) Tempering valve
c) T&P
d) Vacuum breaker

3-7 What can happen if you install an expansion tank on the discharge side of a pump in a closed loop?

a) Nothing
b) Pump cavitation
c) Excessive pressure on the suction side of the pump
d) Expansion tank damage

3-8 Turn to the "typical pump curve" diagram in Section 3.1.4. If the two gauges on each side of the pump read 50 PSI at rest, and 40 PSI and 60 PSI when the pump is running, what is the flow rate?

a) About 10 GPM
b) About 15 GPM
c) About 20 GPM
d) About 25 GPM

3-9 Which is the most reasonable set of temperatures for the inlets and outlets of a heat exchanger of a closed-loop system during normal operation on a sunny day? (All temperatures in degrees F.)

| | To collectors | From collectors | To storage | From storage |
|---|---|---|---|---|
| a) | 100 | 120 | 60 | 55 |
| b) | 120 | 100 | 60 | 60 |
| c) | 120 | 100 | 55 | 60 |
| d) | 100 | 100 | 60 | 55 |

3-10 At a minimum, what should glycol-based solar fluids be checked for?

a) PH
b) Pressure
c) Dissolved copper
d) Dissolved oxygen

3-11 At a minimum, what should oil-based solar fluids be checked for?

a) PH
b) Pressure
c) Dissolved copper
d) Dissolved oxygen

3-12 With all sensor wires disconnected, the switch in the “auto” position, and a jumper across the collector sensor terminals, what should a functional differential thermostat do?

a) Stop running the pump
b) Run the pump for a few minutes, then stop
c) Run the pump
d) Nothing

3-13 A 10K thermistor sensor has a measured resistance of 5000 ohms. What is the sensors approximate temperature in degrees F?

a) 57
b) 77
c) 107
d) 212

3-14 A 3K thermistor sensor has a measured resistance of 5000 ohms. What is the sensor’s approximate temperature in degrees F?

a) 57
b) 77
c) 107
d) 212

3-15 The temperature of the solar fluid leaving the heat exchanger for the collector should be:

a) Lower than temperature of the fluid entering
b) Equal to the temperature of the fluid entering
c) Higher than the temperature of the fluid entering
d) The same as the air temperature around the collector

# 4.0
# TROUBLESHOOTING

What You Will Find in This Chapter

This chapter contains information on determining what is wrong with a solar system. A troubleshooting chart is provided.

Information on how to repair the problems that troubleshooting turns up can be found in Chapter 5, Repair. Preventive maintenance is covered in Chapter 6

The first section of this chapter describes troubleshooting techniques. Those unfamiliar with troubleshooting should read this information carefully.

The information in Appendices A, B and C will be helpful in performing the operations described in this chapter.

## 4.1 TROUBLESHOOTING TECHNIQUES

Troubleshooting an HVAC system should involve more than looking for an obvious problem, or replacing components at random in an attempt to get the system working again. This is particularly true of solar heating systems. What is required is a systematic procedure that carefully “troubleshoots” the system until the problem is located and repaired.

Cause or Symptom

What may appear to be the cause of a problem may actually be a symptom of another problem. For example, if a sensor is secured to an ungrounded solar collector, a discharge of static electricity may travel through the sensor wire and ruin the control.

Replacing the control does not solve the problem that destroyed it. The new control is still likely to be damaged, and the system will be inoperative again. If the collector with the sensor is properly grounded, the actual problem has been solved. Now a new control can be expected to remain functional.

## "Low Impact" Troubleshooting

Another peculiarity of solar systems is the difficulty of performing some troubleshooting procedures without making it a major undertaking.

As an example, it is difficult to examine the interior of the collector loop pump of a closed-loop system. The process may require completely draining the solar fluid into buckets or drums, disassembling and reassembling the pump and refilling the system loop with fluid.

On the other hand, checking the electrical current draw of the pump can confirm or deny that the pump rotor is locked. This can be done without ever opening up the collector loop. This “low impact” troubleshooting usually saves time, material and money.

## Less Likely. But Easy

Most “low impact” troubleshooting is relatively quick and easy. For this reason, it may make sense to do them, even if they relate to causes you believe are unlikely. Occasionally, the cause of a problem is not one of the likely ones, and a few minutes spent performing easy operations is well-rewarded. Also, following a systematic troubleshooting procedure will uncover other problems that should be repaired for long term performance and trouble free maintenance.

## Multiple Problems

Never assume that a system is completely without faults after correcting a problem. A few more minutes spent checking out the rest of the system may save a trip back later to “rerepair” the system.

## Five Steps of Good Troubleshooting

Good troubleshooters usually follow some variation of the following steps when working:

- Planning
- Finding the cause
- Repairing
- Testing
- Keeping records

Planning begins with thinking about the possible causes of a problem before going to the site. This includes the tools and materials necessary to determine what is causing the problem, and estimating the time required to find and correct it. Friday afternoon at 4:00 is a bad time to start tearing down a DHW system, particularly if you may require parts which take 30 days to come in.

Finding the cause is the investigation phase. Start with low impact checks, proceed in an organized and logical fashion, and attempt to isolate the results of testing to the component being tested.

Sometimes the only way to determine if a component is working properly or not is to replace it and see what happens. Remember that this may fix the symptom but it can fail to turn up the real cause of a problem.

Repairs can be made on a "band-aid" basis, doing as little as possible to get the system running again. Another approach is to replace major portions of the system to be absolutely certain the problem is gone. The correct approach is to determine what the real cause of a problem is, and make repairs that solve that problem so it does not happen again.

Whether to repair or replace defective components depends on the cost and availability of the component. Generally, the more expensive and difficult it is to obtain something, the more appropriate the repair of the component. If the part is cheap and readily available, it generally will be replaced. If repairs can be made to the defective component, it can become the new replacement the next time this same component fails in this or other systems.

After the cause of a problem has been identified and corrected, inspect and test the entire system. This confirms that the new components are working, and that no other problems exist.

The defective components should be tested as well. The best time is usually before rebuilding. As an example, if a control works fine on a test bench, but not at all at the site, a problem exists at the site that will not let the new control work there either.

If the part is truly defective, look for the reason it failed. For example, did the control get wet? Will the new control also get wet and fail?

The last part of troubleshooting is record-keeping. Maintenance and repair records are kept to maintain a history of each system. Troubleshooting records should be part of that written history. In addition, writing down the troubleshooting process preserves that information for the person who found the problem.

The sample repairs worksheet at the end of Chanter 5, Repairs, includes a section to describe what troubleshooting was done on a particular system. We suggest you use it, or one like it.

## 4.2 TROUBLESHOOTING CHART

How to Use This Chart:

The troubleshooting chart is arranged in sections which correspond to typical problems encountered with solar heating systems. Any of these problems may be found through a scheduled inspection, or by the system users.

Each problem section includes symptoms, followed by possible causes for each symptom. Causes are arranged with the most likely ones listed first.

Again, check the “low impact” source of a problem first, and remember more than one problem source may exist to find and fix. Careful testing and inspecting may avoid another trip back to “rerepair" the system.

The next section contains information on specific troubleshooting operations, and tips on common causes.

Information on recommended repair actions can be found in Chapter 5 in the repair and replacement section devoted to each component. (For example, sensor and control repair and replacement procedures are in Section 5.1.7.)

| PROBLEM | SYMPTOM | CAUSE | ACTION |
|---|---|---|---|
| Tank temperature lower than normal | Collector loop shows loss of pressure | Collector loop airbound | Check for and repair leaks.<br>Check pressure relief valve(s).<br>Check for proper use. location, and operation of air vents.<br>Recharge system with solar flub. |
| | | Leak in absorber plate | Repair or replace absorber. |
| | Collector loop shows no loss of pressure | Collectors not receiving energy or system under-sized | Check that collectors are:<br>1) facing true south<br>2) tilted properly<br>3) unshaded<br>4) sized for bad, (see App. A+B)<br>5) free of dust, etc. |
| | | Collector loop airbound or leak in expansion tank diaphragm | Check air vents for trapped air.<br>Replace expansion tank<br>Recharge system with solar fluid. |

| PROBLEM (cont) | SYMPTOM (cont) | CAUSE (cont) | ACTION (cont) |
|---|---|---|---|
| Tank temperature lower than normal | Collector loop shows no loss of pressure | Circulating pump not working properly (either water or solar) | Repair or replace pump. |
| | | Valves or pump isolation flanges closed | Return to correct position. |
| | | Bent or crushed pipes | Repair or replace piping. |
| | | Obstruction in collector loop piping or collector(s) | In collector array, unequal outlet temperature will show obstructed collector(s). Check heat exchanger also. Flush and recharge system with solar fluid. |
| | | Storage (water) piping airbound | Check air vents in water lines for proper installation and operation. Check for air in water side of heat exchanger. |
| | | Heat exchanger, pumps or piping undersized | Check with system designer. |
| | | Faulty or incorrectly installed check valve | Check for proper flow direction. Check for blockage. |
| | | Tempering (mixing) valve set too low or not operating properly | Repair or replace tempering valve. Confirm proper valve placement. Follow manufacturers recommendations for placement. |
| Tank temperature lower than normal | Collector loop shows wide fluctuations in pressure | Air in collector loop | Check for and repair leaks. Check pressure relief valve(s). Check for proper use and operation of air vents. Recharge system with solar fluid. |
| | Tank losing heat, especially at night | Tank poorly insulated or insulation wet | Insulate to at least R10 if inside, at least R20 if tank is outside. |
| | | Reverse thermosiphoning | Inspect and repair check valve in solar loop. |
| | Piping losing heat | Improper or insufficient insulation | Repair or replace insulation. |
| | Small storage tank (See Appendix B) | Insufficient storage of heat | Replace with larger tank, or add another one. |
| | Solar tank warm, but back-up heater cool | Faulty back-up heater | Repair or replace back-up heater. |
| | System never operates | Collector sensor or wires open, storage sensor or wires shorted, sensor loose | Repair or replace bad sensor or wires. |

| PROBLEM (cont) | SYMPTOM (cont) | CAUSE (cont) | ACTION (cont) |
|---|---|---|---|
| Tank temperature lower than normal | System never operates | Control power off, switch set wrong, or control is defective | Return switch to correct position, confirm power supply, check control and replace if defective. |
| | System runs all the time | Collector sensor or wires shorted, storage sensor or wires open, sensor loose | Repair or replace bad sensor or wires. Tighten connections. |
| | | Control switch set wrong, or control is defective | Set control switch to correct position, replace control if defective. |
| | System runs at odd times or relay chatters | Sensor wires too close to 120V (or higher) lines or other electrical “noise” | Reroute wires, and/or use shielded cable. Connect shield to control case ground only. |
| | Gradual performance decrease | Collectors shaded, or glazings dirty | Clear obstruction or clean glazings when cool. |
| | | Condensation on inside of collector glazings | Check for weep holes, make sure they are open. If none exist, drill three 3/16” holes in bottom of affected collector. |
| | | Pipe insulation degraded | Repair or replace pipe insulation. |
| | | Tempering valve defective | Repair or replace tempering valve, confirm proper valve placement. |
| | | Heat exchanger scaling up with hard water | Descale heat exchanger |
| | | Air in storage loop (water) piping or tanks | Repair or replace air vents if faulty, and/or reroute storage loop piping. |
| Drop in DHW pressure delivered to load | Drop in pressure of both hot and cold fixtures | Strainer, filter, valve or conditioner clogged or closed in cold supply | Clean or replace clogged unit. Return valves to proper position. Check pressure reducing valve for proper flow direction. |
| | Drop in pressure of hot fixtures only | Valve closed in storage tank feed or supply line | Return valves to proper position. |
| | | Air in storage tank, or tank feed or supply line, or heat exchanger | Repair or replace air vents and/or reroute storage loop piping |
| System not running at appropriate times | System never operates | Refer to “System never operates” above | |
| | System runs all the time | Refer to “System runs all the time” above | |
| | System runs at odd time or relay chatters | Refer to “System runs at odd times or relay chatters” above | |

| PROBLEM (cont) | SYMPTOM (cont) | CAUSE (cont) | ACTION (cont) |
|---|---|---|---|
| Noises | Gurgling in pipes | Air in piping | Check air vents in water lines for proper installation and operation, and/or reroute piping. Vent air from collector loop piping, and/or recharge with solar fluid. |
| | Humming | Pump vibration | Isolate pumps and piping from building structure. Inspect shafts and bearings. |
| | Squeaking | Pipe expansion/contraction | Isolate piping from building structure. Use “slip” hangers. |
| | Pump screeching | Wet rotor pump not primed | Repair or replace pump. Be sure pump is filled before starting. |
| | | Bearings worn, or shaft out of alignment | Repair or replace worn bearings. Check shaft alignment. |

## 4.3 SPECIFIC TROUBLESHOOTING OPERATIONS

### 4.3.1 Sensor and Sensor Wiring.

Controls Without Digital Displays

To check suspicious sensors, disconnect the wires from their terminal at the control. Leave the connections intact at the sensor for the time being. Using an ohmmeter, and the temperature vs. resistance charts in Tables 4-1 and 4-2, determine if the resistance of the sensor is appropriate for the temperature it should be measuring. (If using an analog meter with several resistance scales, the 100 x R scale is normally the most useful.)

Confirm also that the sensor resistance changes as the sensor temperature changes. This may require warming a cool sensor in your hand, or moving a sensor off a warm collector or tank into the cooler air.

CAUTION

Do not immerse sensors in warm or cold water. Most sensors are not waterproof, and can be damaged with water. Resistance readings of an immersed sensor will not be correct. If temperature extremes are needed to check the sensor, wrap it in a plastic bag before immersing it in water.

Remember, for most sensors, resistance goes up as temperature goes down. A temperature increase results in a resistance decrease. If the ohmmeter shows a direct short (zero ohms), or an open circuit (infinite ohms), check the sensor wiring as well as the sensor itself.

If the sensor resistance goes up with temperature increases, it is not a “standard” sensor. If all system sensors are the same type, are matched to the control, and the sensors and control are operating properly, there is no need to replace them. If one sensor or the control stops working properly, the entire control system should be replaced, rather than mixing control and sensor types.

Check sensor wiring for staples shorting out the wires, loose or corroded connections, and outright breaks. Ohmeter readings will indicate these conditions.

Make sure sensor wiring is more than one foot away from 120V line voltage wiring and motors, and more than two feet from 240V wiring and motors. It is very easy for a tiny electrical current to be induced in the low voltage sensor wires. This current will make normal control operation impossible.

**Controls With Digital Displays**

If the control has a digital display, leave the sensor wires connected, and use the control display to check the sensors. If the displayed temperatures do not appear appropriate, disconnect the sensor wires from the control and use an ohmmeter as described above.

Many digital displays indicate short or open circuits by flashing the digits on display. Again, an ohmmeter should be used on disconnected sensor wires.

TABLE 4-1: Temperature vs. Resistance in Ohms for **10K** Sensors

| **ºF** | **ºC** | **Resistance** | ºF | ºC | Resistance | ºF | ºC | Resistance |
|---|---|---|---|---|---|---|---|---|
| 32 | 0.0 | 32,654 | 106 | 41.1 | 5,093 | 180 | 82.2 | 1,170 |
| 34 | 1.1 | 30,859 | 108 | 42.2 | 4,873 | 182 | 83.3 | 1,129 |
| 36 | 2.2 | 29,174 | 110 | 43.3 | 4,663 | 184 | 84.4 | 1,090 |
| 38 | 3.3 | 27,592 | 112 | 44.4 | 4,464 | 186 | 85.6 | 1,053 |
| 40 | 4.4 | 26,105 | 114 | 45.6 | 4,274 | 188 | 86.7 | 1,017 |
| 42 | 5.6 | 24,709 | 116 | 46.7 | 4,093 | 190 | 87.8 | 982 |
| 44 | 6.7 | 23,395 | 118 | 47.8 | 3,921 | 192 | 88.9 | 949 |
| 46 | 7.8 | 22,160 | 120 | 48.9 | 3,758 | 194 | 90.0 | 917 |
| 48 | 8.9 | 20,998 | 122 | 50.0 | 3,602 | 196 | 91.1 | 886 |
| 50 | 10.0 | 19,903 | 124 | 51.1 | 3,453 | 198 | 92.2 | 857 |
| 52 | 11.1 | 18,873 | 126 | 52.2 | 3,312 | 200 | 93.3 | 828 |
| 54 | 12.2 | 17,903 | 128 | 53.3 | 3,177 | 202 | 94.4 | 801 |
| 56 | 13.3 | 16,988 | 130 | 54.4 | 3,048 | 204 | 95.6 | 775 |
| 58 | 14.4 | 16,126 | 132 | 55.6 | 2,925 | 206 | 96.7 | 749 |
| 60 | 15.6 | 15,313 | 134 | 56.7 | 2,808 | 208 | 97.8 | 725 |
| 62 | 16.7 | 14,546 | 136 | 57.8 | 2,697 | 210 | 98.9 | 702 |
| 64 | 17.8 | 13,822 | 138 | 58.9 | 2,590 | 212 | 100.0 | 679 |
| 66 | 18.9 | 13,139 | 140 | 60.0 | 2,488 | 214 | 101.1 | 658 |
| 68 | 20.0 | 12,493 | 142 | 61.1 | 2,391 | 216 | 102.2 | 637 |
| 70 | 21.1 | 11,883 | 144 | 62.2 | 2,298 | 218 | 103.3 | 617 |
| 72 | 22.2 | 11,307 | 146 | 63.3 | 2,209 | 220 | 104.4 | 597 |
| 74 | 23.3 | 10,762 | 148 | 64.4 | 2,124 | 222 | 105.6 | 579 |
| 76 | 24.4 | 10,247 | 150 | 65.6 | 2,043 | 224 | 106.7 | 561 |
| 78 | 25.6 | 9,760 | 152 | 66.7 | 1,966 | 226 | 107.8 | 543 |
| 80 | 26.7 | 9,298 | 154 | 67.8 | 1,891 | 228 | 108.9 | 527 |
| 82 | 27.8 | 8,862 | 156 | 68.9 | 1,820 | 230 | 110.0 | 511 |
| 84 | 28.9 | 8,448 | 158 | 70.0 | 1,753 | 232 | 111.1 | 495 |
| 86 | 30.0 | 8,056 | 160 | 71.1 | 1,688 | 234 | 112.2 | 480 |
| 88 | 31.1 | 7,685 | 162 | 72.2 | 1,625 | 236 | 113.3 | 466 |
| 90 | 32.2 | 7,333 | 164 | 73.3 | 1,566 | 238 | 114.4 | 452 |
| 92 | 33.3 | 6,999 | 166 | 74.4 | 1,509 | 240 | 115.6 | 438 |
| 94 | 34.4 | 6,683 | 168 | 75.6 | 1,454 | 242 | 116.7 | 425 |
| 96 | 35.6 | 6,382 | 170 | 76.7 | 1,402 | 244 | 117.8 | 413 |
| 98 | 36.7 | 6,097 | 172 | 77.8 | 1,351 | 246 | 118.9 | 401 |
| 100 | 37.8 | 5,827 | 174 | 78.9 | 1,303 | 248 | 120.0 | 389 |
| 102 | 38.9 | 5,570 | 176 | 80.0 | 1,257 | 250 | 121.1 | 378 |
| 104 | 40.0 | 5,326 | 178 | 81.1 | 1,213 | | | |

TABLE 4-2: Temperature vs. Resistance in Ohms for **3K** Sensors

| ºF | ºC | Resistance | ºF | ºC | Resistance | ºF | ºC | Resistance |
|---|---|---|---|---|---|---|---|---|
| 32.0 | 0 | 9,810 | 105.8 | 41 | 1,540 | 179.6 | 82 | 354 |
| 33.8 | 1 | 9,300 | 107.8 | 42 | 1,460 | 181.4 | 83 | 342 |
| 35.6 | 2 | 8,850 | 109.4 | 43 | 1,420 | 183.2 | 84 | 333 |
| 37.4 | 3 | 8,430 | 111.2 | 44 | 1,360 | 185.0 | 85 | 321 |
| 39.2 | 4 | 8,010 | 113.0 | 45 | 1,310 | 186.8 | 86 | 312 |
| 41.0 | 5 | 7,620 | 114.8 | 46 | 1,260 | 188.6 | 87 | 303 |
| 42.8 | 6 | 7,260 | 116.6 | 47 | 1,210 | 190.4 | 88 | 293 |
| 44.6 | 7 | 6,900 | 118.4 | 48 | 1,170 | 192.2 | 89 | 284 |
| 46.4 | 8 | 6,570 | 120.2 | 49 | 1,120 | 194.0 | 90 | 275 |
| 48.2 | 9 | 6,270 | 122.0 | 50 | 1,080 | 195.8 | 91 | 267 |
| 50.0 | 10 | 5,970 | 123.8 | 51 | 1,040 | 197.6 | 92 | 259 |
| 51.8 | 11 | 5,700 | 125.6 | 52 | 1,002 | 199.4 | 93 | 251 |
| 53.6 | 12 | 5,430 | 127.4 | 53 | 966 | 201.2 | 94 | 243 |
| 55.4 | 13 | 5,190 | 129.2 | 54 | 930 | 203.0 | 95 | 236 |
| 57.2 | 14 | 4,950 | 131.0 | 55 | 879 | 204.8 | 96 | 229 |
| 59.0 | 15 | 4,710 | 132.8 | 56 | 864 | 206.6 | 97 | 223 |
| 60.8 | 16 | 4,500 | 134.6 | 57 | 831 | 208.4 | 98 | 215 |
| 62.6 | 17 | 4,290 | 136.4 | 58 | 801 | 210.2 | 99 | 210 |
| 64.4 | 18 | 4,110 | 138.2 | 59 | 774 | 212.0 | 100 | 204 |
| 66.2 | 19 | 3,930 | 140.0 | 60 | 747 | 213.8 | 101 | 198 |
| 68.0 | 20 | 3,750 | 141.8 | 61 | 720 | 215.6 | 102 | 192 |
| 69.8 | 21 | 3,570 | 143.6 | 62 | 696 | 217.4 | 103 | 187 |
| 71.6 | 22 | 3,420 | 145.4 | 63 | 672 | 219.2 | 104 | 182 |
| 73.4 | 23 | 3,270 | 147.2 | 64 | 648 | 221.0 | 105 | 176 |
| 75.2 | 24 | 3,150 | 149.0 | 65 | 624 | 222.8 | 106 | 171 |
| 77.0 | 25 | 3,000 | 150.8 | 66 | 603 | 224.6 | 107 | 167 |
| 78.8 | 26 | 2,870 | 152.6 | 67 | 582 | 226.4 | 108 | 162 |
| 80.6 | 27 | 2,750 | 154.4 | 68 | 564 | 228.2 | 109 | 158 |
| 82.4 | 28 | 2,630 | 156.2 | 69 | 543 | 230.0 | 110 | 153 |
| 84.2 | 29 | 2,520 | 158.0 | 70 | 525 | 231.8 | 111 | 149 |
| 86.0 | 30 | 2,420 | 159.8 | 71 | 507 | 233.6 | 112 | 145 |
| 87.8 | 31 | 2,320 | 161.6 | 72 | 492 | 235.4 | 113 | 141 |
| 89.6 | 32 | 2,220 | 163.4 | 73 | 474 | 237.2 | 114 | 137 |
| 91.4 | 33 | 2,130 | 165.2 | 74 | 459 | 239.0 | 115 | 134 |
| 93.2 | 34 | 2,040 | 167.0 | 75 | 444 | 240.8 | 116 | 130 |
| 95.0 | 35 | 1,960 | 168.8 | 76 | 429 | 242.6 | 117 | 127 |
| 96.8 | 36 | 1,880 | 170.6 | 77 | 417 | 244.4 | 118 | 123 |
| 98.6 | 37 | 1,800 | 172.4 | 78 | 402 | 246.2 | 119 | 120 |
| 100.4 | 38 | 1,730 | 174.2 | 79 | 390 | 248.0 | 120 | 117 |
| 102.2 | 39 | 1,670 | 176.0 | 80 | 378 | 249.8 | 121 | 114 |
| 104.0 | 40 | 1,600 | 177.8 | 81 | 366 | | | |

### 4.3.2 Controls.

**Jumper Method**

With all sensor wires disconnected and the control switch in the “automatic” position, jumper the two terminals marked “Collector” (or “COLL,” etc.) (Figure 4-1). The solar loop pump (and water loop pump, if used) should come on.

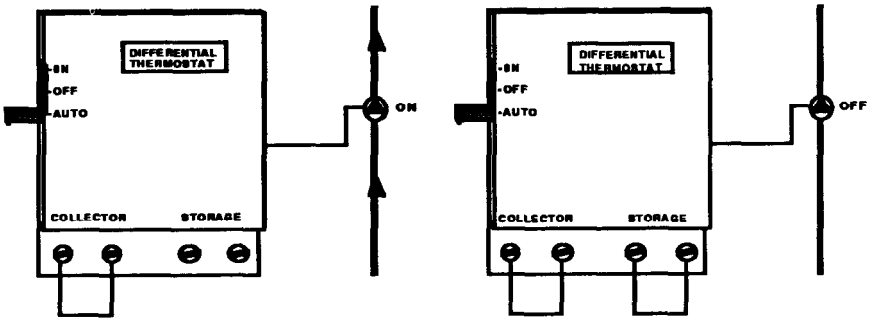


FIGURE 4-1
Checking On/Off Operation by the Jumper Method

With the collector sensor terminals shorted, jumper the sensor terminals marked “Storage” (or “STOR,” etc.). The pump(s) should go off.

To test the high limit function, first determine the brand and type of differential thermostat controlling the system. Most controls are 10K, that is their sensors have 10,000 ohms resistance at 77°F. If you have any doubt about this, refer to the system’s operation and maintenance manual. If one does not exist, remove a sensor, give it time to come to room temperature, and measure its resistance with an ohmmeter.

Controls manufactured by Heliotrope General and Johnson Controls are not likely to be 10K. Table 4-4 contains information on currently available controls.

Determine the high limit setting of the control from Table 4-4, the control labeling, or the setting of the control’s high limit adjustment dial. (-This dial is usually on a potentiometer, sometimes called a “pot.“) (Figure 4-2)


FIGURE 4-2
High Limit Dial (left) and Control Switch (right) on a Solar Control

Jumper the collector sensor terminals on the control. Once the system is running hold the leads of an appropriate resistor against the storage sensor terminals. The system should turn off, as the control is being told the storage tank is above the high limit temperature.

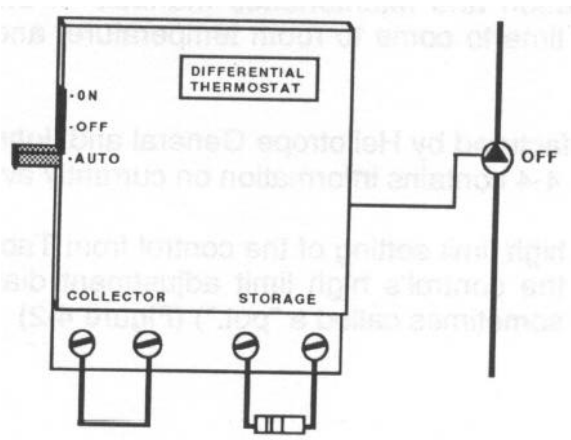


FIGURE 4-3
Checking High Limit Function with a Single Resistor

Use Table 4-1 or 4-2 to determine the right resistance to use to impersonate a particular temperature. An abbreviated version, with resistor color codes is presented in Table 4-3.

TABLE 4-3: Resistance and Color Codes for Typical High Limit Situations

| Temperature (ºF) | 3K Resistance and Color Code | 10K Resistance and Color Code |
|---|---|---|
| 160 | 500 Ohms<br>Green, Red | 1700 Ohms<br>Brown, Violet, Red |
| 180 | 350 Ohms<br>Orange, Green, Black | 1200 Ohms<br>Brown, Red, Red |

Control Tester Method

A more accurate method of testing differential thermostats is with a special tester designed for the purpose (Figure 4-4). Normally, these units have four leads or terminals. These are connected to the collector and storage sensor terminals of the control. The tester supplies a calibrated resistance to the two sensor inputs.

Most of the available testers supply a fixed resistance to the storage terminals, and change the resistance supplied to the collector terminals. The numbers on the tester dial usually refer to the temperature difference between the storage and collector terminals.

As the tester dial is slowly turned to greater differentials, the resistance supplied to the collector sensor terminals is lowered. At the “on” differential, the control should turn on.

FIGURE 4-4
Solar Control Tester

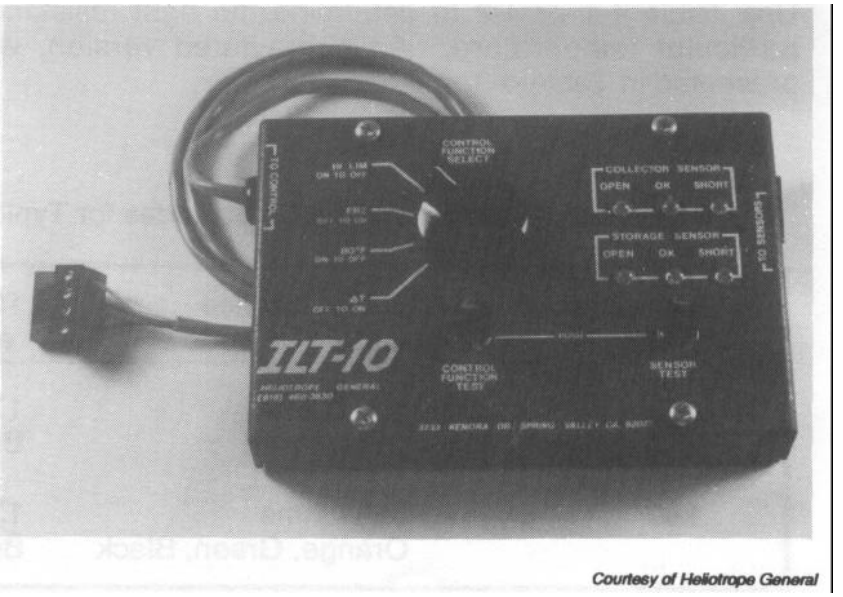

Courtesy of Heliotrope General

Next, the dial is turned slowly downward to lower differentials. This increases the resistance shown to the collector sensor terminal. At the “off” differential, the control should shut off.

Many testers also include a high limit test function. Generally, the tester shorts out the collector sensor’s terminals, to ensure the control is trying to run the system. Then, the resistance supplied to the storage sensor terminals is reduced, impersonating a rising storage temperature. When the high limit is reached, the control should shut off.

## About Accuracy

The dials on most testers are not very accurate. If the control has a digital display, use that instead of the numbers on the tester dial.

In descending order of accuracy, the dials and readouts seen during control and sensor testing are:

| | |
|---|---|
| Most accurate: | Control digital display |
| | Digital ohmmeter |
| | Analog ohmmeter |
| | Resistor color code |
| | Control tester dial |
| Least accurate: | Control adjustment pot dials |

TABLE 4-4: Characteristics of Currently Available Controls (As of January, 1988)

| Manufacturer: | Model: | Type: | On/Off: (ºF) | High Limit: (ºF) |
|---|---|---|---|---|
| Heliotrope General* | TempTrak II Series | 3K/10K | Adj: 50-100 | Adj: 80-215 |
| | DTT-64 Series | 10K | 20/3 or 10/3 | None, 160, or 180 |
| | DTT-84/94 Series | 10K | 18/5 or 9/4 | 160 or 180 |
| | DTT-84DD | 10K | 30/3 | 180 |
| | DTT-74 Series | 10K | 20/5 or 10/5 | None, 160, or 180 |
| Independent Energy | CM-30/32 | 10K | Adj: 8-24/4 | Adj: 110-230 |
| | CM-33 | 10K | Adj: 8-24/4 | Adj: 50-104 |
| | CM-50 | 10K | Adj: 15/4 to 40/20 | Adj: 60-160 |
| | C-30 Series | 10K | 20/5 or 8/3 | Adj: 105-212 |
| | C-35 Series | 10K | 4/1 or 8/3 | Adj: 62-104 |
| Pyramid Controls | All | 10K | 14/3 | 163 |
| Rho Sigma | RS504 Series | 10K | 20/3 or 12/3** | 160 |
| | RS121 Series | 10K | 20/3 | Adj: 120-220 |
| | RS360 Series | 10K | 20/3.5 | Per specification |

* Older Heliotrope General Controls are all 3K

** Proportional control: The pump motor is run at a speed proportional to the differential. This type of control is rarely used.

NOTE

Whenever checking controls or sensors, also check to be sure the collector with the sensor is properly grounded.

**4.3.3 Airbound Loops.** If enough air bubbles gather at the high point of a piping loop, a gap in the fluid may form.

Now that the piping loop is no longer completely filled, the circulating pump must work against the effects of gravity. This usually means no flow occurs, since the pump was not designed for this condition. (Figure 4-5)

FIGURE 4-5
An Airbound Collector Loop

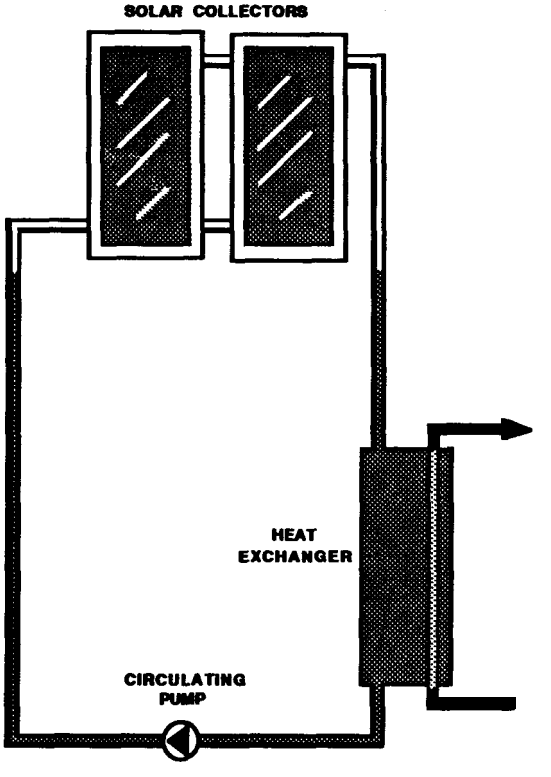


Piping with air in it is called "airbound." Flow will be obstructed or stopped. This occurs most often in collector loops, but is also possible in storage piping. Some common causes are:

- incomplete filling of the solar loop in closed loop systems
- leaks admitting air into solar loops
- ruptured expansion tank diaphragms.
- dissolved air in potable water forming bubbles which are not vented out of piping and tanks (usually aggravated by bad or missing air vents).

Symptoms of an airbound collector loop in a Closed loop system include:

- o Wide pressure fluctuations with temperature changes (in some cases leading to pressure relief valve blowoff)
- o No evidence of flow by a flow meter, although the pump is operating normally otherwise
- o A high difference in pressure on each side of the pump, although the pump is operating normally otherwise
- o Uneven collector temperatures, both from one collector to another, and hot spots in individual units
- o Higher than normal pump temperatures
- o Collector feed and return lines are both about room temperature on a sunny day; although the pump is operating normally otherwise (the pump may be heating the feed line somewhat)
- o Approximately equal temperatures on the inlet and outlet of both the solar fluid and water sides of the heat exchanger
- o Evidence of leakage at joints or components
- o Fluid in the air chamber of diaphragm type expansion tanks (very briefly depress schrader valve stem)

Symptoms of an airbound collector loop in a draindown system include:

- o Wide pressure fluctuations with temperature changes (in some cases leading to temperature and pressure relief valve blowoff)
- o No evidence of flow by a flow meter, although the pump is operating normally otherwise
- o A high difference in pressure on each side of the pump, although the pump is operating normally otherwise
- o Higher than normal pump temperatures

- Collector feed and return lines are both about room temperature on a sunny day, although the pump is operating normally otherwise (the pump may be heating the feed line somewhat)

- Larger than normal amounts of air released at hot water fixtures Evidence of leakage or scaling at collector air vents or vacuum breakers

Symptoms of an airbound storage loop in closed loop and drainback systems are:

- No evidence of flow in a flow meter, although the pump is operating normally otherwise

- Higher than normal pump temperatures

- Collector feed and return lines are both at a high temperature on a sunny day, but the two sides of the storage loop are both at about room temperature (the storage pump may be heating the piping somewhat)

- High points in storage piping without functional air vents

Collector loops in drainback systems do not become airbound. However, if the reservoir tank for the collector loop does not have enough water, the collector loop pump cannot move water through the collectors. The symptoms are:

- Low water level in a sight glass

- No evidence of flow in a flow meter, although the pump is operating normally otherwise

- Higher than normal pump temperatures

- Collector feed and return lines are both about room temperature on a sunny day, although the pump in operating normally otherwise (the pump may be heating the feed line somewhat)

- No temperature difference between the two sides of the storage loop (this may also indicate an airbound storage loop)

- Pump damage, in extreme cases when no water is left in the loop

4.3.4 **Pumps.** Many “bad” pumps are actually not. Before draining fluid and tearing down a pump, make sure the piping loop is free of air, no valves are closed, and that the pump is getting electrical power.

Pump noise will indicate if the shaft is out of alignment, or the bearings are worn. If the seals or gaskets are leaking, you can see the evidence. Check the service record for the system: has the motor received necessary lubrication?

Check the system flow rate. This may be possible with a flow meter, a flow setter with differential pressure gauge, or by comparing the pressure difference across the pump with the manufacturer’s pump curve. (To covert PSI into feet of head, multiply PSI by 2.3.)

The next step should be to use a snap-around ammeter to measure the pump motor’s current draw during operation (Figure 4-6). If you know the correct amperage draw for the pump, you can quickly identify a number of problems. In some cases, it may be possible to avoid draining the system and tearing down the pump.

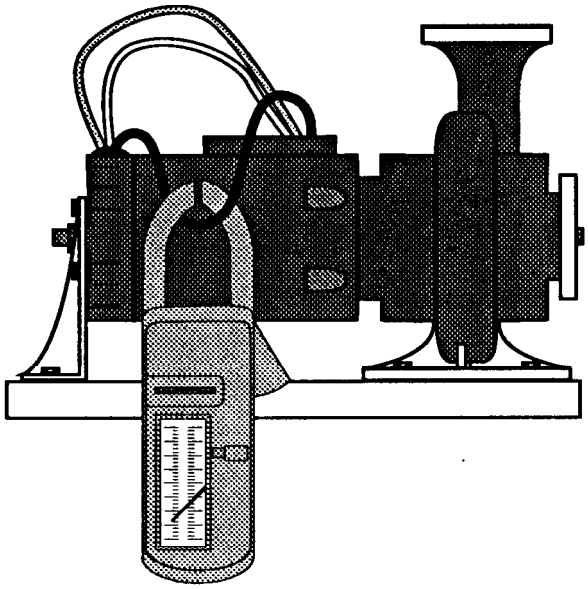

FIGURE 4-6
Using an Ammeter
on a Solar Pump

Use the following table to troubleshoot pump conditions with an ammeter. Remember to start with the highest scale and move downward until the amperage reading is in the upper half of the scale.

TABLE 4-5: Current Readings and Pump Problems

| If Ammeter Reads: | Inspect for: |
|---|---|
| Zero | Power supply problem<br>Control problem<br>Relay or starter problem<br>Broken motor lead<br>Thermal overload tripped |
| Too low<br>(1/4 to 1/2 times specifications) | Motor problem<br>Broken or slipping shaft |
| Correct amount | Airbound loop<br>Closed valve, backwards check valve<br>Broken or slipping shaft<br>Direction of motor rotation |
| Too high<br>(1 1/4 to<br>1 1/2 times specifications) | Misaligned shaft<br>Worn bearings<br>Foreign matter in volute<br>Impeller against volute wall<br>Motor problem |
| Much too high<br>(2 or more times specifications) | Locked rotor problem |

If the ammeter reads zero, too high or much too high, also check relay contacts for damage from excessive current draw.

4.3.5 Flow Rates. If a flow meter is in the loop, compare the loop's flow rate with the rate called for in the system's operation and maintenance manual. If this information is not available, use Appendix B as a guide to the proper flow rate.

If a flow setter, with ports for measuring differential pressure, is in the loop, follow the instructions for that unit. Compare the reading to the system's operation and maintenance manual or Appendix B.

Some manufacturers supply pressure drop information for specific components, such as collectors or heat exchangers. If pressure gauges or measurement ports are available, this information can be used to determine flow rates.

The most common use of this technique involves reading the pressure on each side of the pump when the pump is off, and again when it is operating.

After converting the pressure rise across the pump into feet of head, use the manufacturer's pump curve, and estimate the flow rates. This technique is described in greater detail in Section 3.1.4.

An estimate of flow rates can be made from the temperature changes through the system. Table 4-6 describes some typical design conditions. It assumes a reasonably sunny day, with storage temperatures of 120°F. Collector loop temperatures are measured at the collector feed and return lines. Storage loop temperatures are measured at the storage water inlet and outlet at the heat exchanger.

Remember that the temperatures are affected not only by flow rates, but by the amount of solar energy striking the collectors as well. Therefore, use these as rough guidelines only!

In general, the lower the collector loop temperature, the better. At first glance this may not make sense. However, remember that if heat is being efficiently removed from the collectors, their temperature will be lower. High outlet temperatures from the collectors are an indication that too much heat is being left in them or that collectors are inefficient.

TABLE 4-6: Flow Estimates from Temperature Changes

**Collector Loop**

| If the temperature change is: | The flow rate probably is: |
|---|---|
| Zero | Zero |
| Less than 5°F | Too high |
| Between 5°F and 25°F | In the correct range |
| More than 25ºF | Too low |

**Storage Loop** (on Drainback or Closed-Loop Systems)

| If the temperature change is: | The flow rate probably is: |
|---|---|
| Zero | Zero |
| Less than 2°F | Too high |
| Between 2ºF and 10°F | In the correct range |
| More than 10°F | Too low |

### 4.3.6 Fluids.

Water Corrosiveness

Water can be corrosive for a number of reasons. The three most common causes are:

- low pH (acid water)
- high dissolved oxygen content
- high dissolved solids content

Cutting a small section of piping from an easily drained, easily repaired section of piping is sometimes the best way to determine if the water is corrosive. Knowledge of local conditions is a traditional way to know that aggressive water is causing a problem. Laboratory analysis is another choice, especially when it is difficult to determine what is causing the water to be corrosive.

Water Hardness - Scaling

Water with a high percentage of calcium and magnesium compounds is usually described as “hard.” These minerals will deposit on piping system surfaces, particularly heated ones. The reduction in piping diameter will cause flow rates and heat transfer to drop.

If the system flow rates at the time of installation are known, a gradual reduction usually indicates this scaling is occurring. It may be possible to visually inspect heat exchanger passages. In extreme cases valves will not seat properly, and pumps may be damaged by the build-up.

Water With Iron or Manganese

Iron and manganese usually do not greatly affect solar systems, except for their contribution to the water’s corrosivity. In extreme cases, ferric iron build-up in piping systems may cause problems similar to hardness.

Water With Microbial Contamination

The most common group of microorganisms which cause problems with solar systems are the iron bacteria. Although they are rare, their colonies can block flow or interfere with component operation.

More important, any microbial contamination poses hazards to the users of the system. Disinfection equipment must be installed as soon as possible.

Water treatment professionals are equipped to test for and treat all of these problems. In severe cases, bringing in a specialist should be considered.

Glycols

Any glycol left in a working system for over three years or in an inoperative one for over three months may need replacement. Leaks resulting from acidic glycol are usually spread fairly uniformly throughout the system.

Burst piping from inadequate concentrations of glycol will be most common in the absorber plates, as these reach the lowest temperature in the system on cold, clear nights.

Concentration and inhibitor condition should be checked. Concentration can be determined with an optical refractometer or a manufacturer’s test kit. (Figure 4-7) Some laboratories are equipped to determine this.

The condition of the inhibitor can be checked by a manufacturer's test kit or a laboratory. Another good method is to use pH tape or paper. If the pH is below 6, the fluid must be reinhibited or replaced. See section 3.1.6 for additional information.

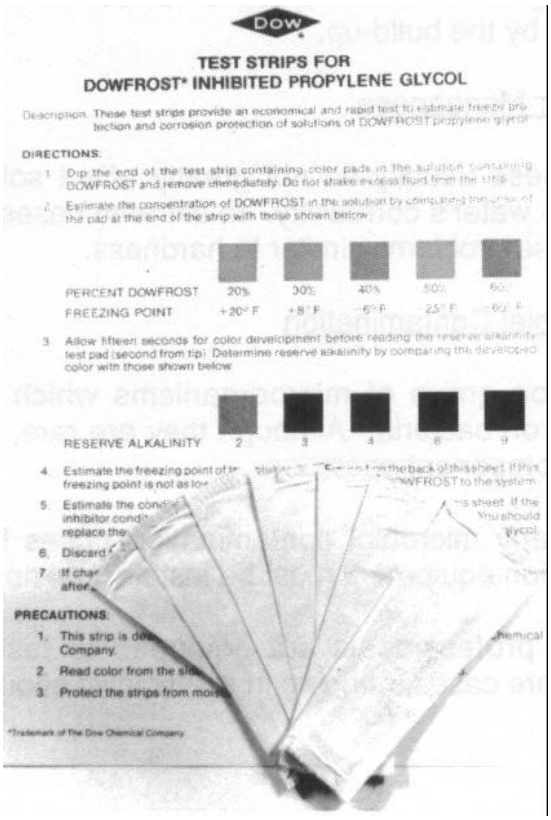


FIGURE 4-7
A Dowfrost Test Kit and a Dow Optical Refractometer

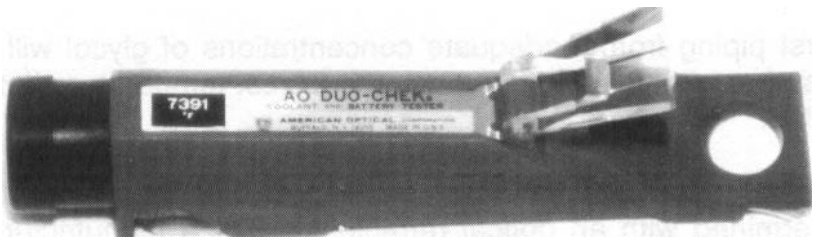

Make-Up Water Systems

If glycol-filled loops are equipped with automatic water make-up, glycol can leak out and be replaced by water. Eventually, the collector loop can freeze, causing severe damage. If the make-up water system has a gate valve, it should be closed and tagged so it will remain closed.

Fluid/Material Compatibility

Leaks at gaskets, seals, valve stems, hoses, etc. may be occurring because the rubbers and plastics are being attacked by the fluid. This is most common with synthetic and silicone oils, but it also happens with glycols.

Use the table in Appendix E to determine if the fluid and materials are compatible. This chart assumes the system is mostly copper tubing, and that relatively small amounts of the other metals are used.

**4.3.7 Piping Joints,** Leaks in piping joints are not always obvious, since they may be covered with insulation. The insulation may also “channel” fluid far away from the actual leak.

A “phantom leak” may occur if an automatic air vent is used with glycols or oils. As the fluid heats up, some of it vaporizes and leaves the system through the air vent. These vents, if installed, should be replaced with manual vents. At the very least, automatic vents should be tightly capped off during system operation, and then replaced the next time the system is drained.

It has been found that improperly soldered joints can hold pressure in glycol loops for months or even years after the installation. Eventually, the soldering flux which plugged the holes in the joint finally melts out, and a leak results.

Improper types of thread sealants may hold pressure for a few months before leaking. Additional information on the use of thread sealants is provided in section 5.2.2 and Appendix E.

The use of 95/5 tin/antimony solder on bronze or brass fittings may cause the zinc to leach out of the fitting, causing porosity leaks. 96/4 silver solder should be used instead.

If a large number of joints are leaking in the collector loop, find out if 50/50 solder was used. This solder’s melting point of 370°F is too low for the collector loop. Some plumbing inspectors have solder testers, and may be willing to test a sample for you.

Dissimilar metals in contact may create galvanic corrosion at the site of contact, or in soldered joints throughout the system. The most common example of this is when galvanized pipe hangers or perforated strap directly contact copper tubing. The resultant galvanic action corrodes the solder out of the joints.

**4.3.8 Valves,** Improperly positioned or configured valves can result in the system being unable to collect or deliver heat. If the storage tank is warm, the problem is in the delivery components. If the tank is cold, the collection components are at fault.

Most tempering valves fail in such a way that all they deliver is cold water. Since most are improperly installed (directly above the tank), they eventually fail. -Check also for correct setting.

Solar loop check valve failure is a common problem. On a cold night after a warm day, the feed and return temperatures should be equal. If there is a temperature difference of more than 5ºF, the check valve is not stopping the loss of heat by forward or reverse thermosiphoning. (Figure 4-8)

On pool heating systems, the diverting valve may be “pilot operated.” The actual opening and closing of the valve is done by suction or pressure supplied by the pool pump. Suction is supplied by tubing connected to the inlet piping of the pump. Pressure is supplied by a tube from the pump’s discharge side.

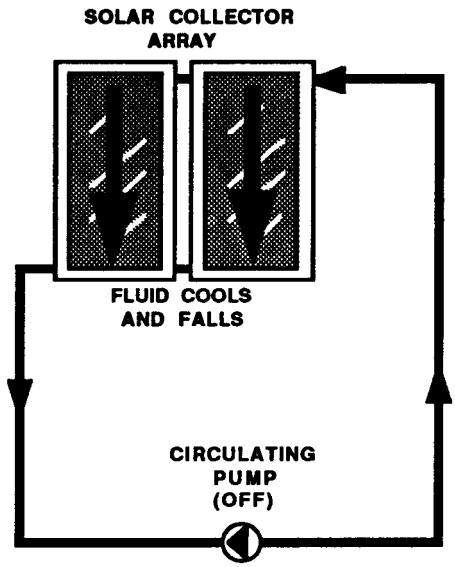


FIGURE 4-8
Reverse Thermosiphoning in a Closed-Loop System

The pressure and/or suction may be operated directly by the system control. In other cases, the opening and closing may be triggered by an electrical signal from the control. This is usually low voltage: 12 or 24 volts. Check both the tubing and any wiring when troubleshooting pool heating systems control valves.

**4.3.9 Heat Exchangers.** A reduction in heat exchanger performance may be caused by scale from hard water, glycol sludge or reduced flow due to an airbound loop, improperly positioned valve or defective pump. Any of these will cause an overall rise in collector loop temperatures.

Leaks may be caused by improper installation techniques or materials, physical stresses, corrosive fluid or incompatible seals materials.

Another common cause of leaks is freezing. If the solar fluid is circulating below 32ºF, it can easily freeze the water in the heat exchanger. This circulation may be from reverse thermosiphoning or a defective control or sensor running the system at night.

If city water pressure is entering the solar loop in closed loop or draindown systems, the loop pressure may be much higher or lower than normal.

**4.3.10 Insulation.** Inadequate, damaged or missing piping insulation will reduce system performance considerably. However, before deciding pipe insulation is the problem, make sure:

- flow rates are proper and balanced
- collectors are clean and unshaded
- controls and sensors are operating properly
- tank and heat exchanger piping is correct
- valves are properly positioned

Tanks losing heat overnight may have inadequate insulation, but also check for:

- reverse thermosiphoning
- “invisible loads” (such as a dripping hot water faucet)
- inaccurate or poorly placed tank thermometer
- defective control or sensor running the system at night

Wet insulation offers very little resistance to heat flow, but may appear intact. If a leak occurs in a system, check all the pipe insulation to be sure it is dry.

**4.3.11 Gauges.** Gauges may be checked in two ways. The first is to bring the gauge to a standard condition. For pressure gauges, remove them from the system. They should read zero. For thermometers, take them out and put. them in ice water or boiling water, depending on their temperature range.

The second method is comparison. Replace the suspect gauge with one you know to be accurate. This is more practical with thermometers than with pressure gauges.

A typical problem with thermometers is their location. For example, the thermometer on a storage tank of 120 gallon capacity or less is usually installed in the outlet piping of the tank. If it is more than a few inches from the tank, the only time it will accurately report tank temperature is when water from the tank runs by it.

**4.3.12 Storage Tanks.** Problems with storage tanks may actually be caused by piping errors. One of the most common is mixing up inlets and outlets. Another problem is the length of dip tubes. If they are too short or too long, the tank may not be able to store or deliver its full heat capacity. (Figure 4-9)

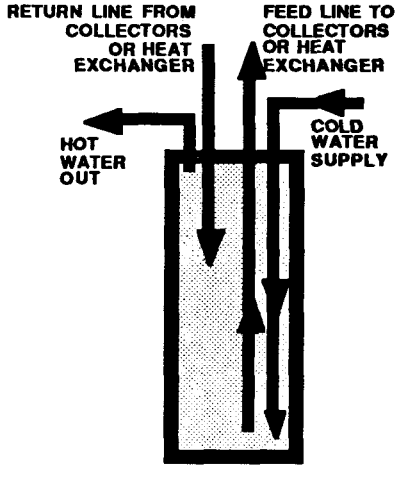


FIGURE 4-9
Correct Dip Tube Lengths in a "Four-Stub Tank

If the dip tubes are plugged with scale, or collapsed from heat, the system will not store heat properly. Higher collector loop temperatures is one symptom of this.

Another problem may be an incorrectly positioned auxiliary heating element. For the system to operate properly, auxiliary elements must be in the upper half of the tank.

Finally, frequent replacement of anode rods indicates highly corrosive water or an exposed metal surface.

## 4.4 Questions for Self-study

Instructions: Choose the one answer you believe is correct. Answers to questions are in Appendix F.

4-1 What is the best way to warm up a thermistor sensor to test it?

a) Use the flame of a soldering torch
b) Warm it in your hand
c) Drop it into hot water
d) Bake it in an oven

4-2 A thermistor sensor is removed from a hot collector and left in the shade behind the collector; What should happen to its resistance?

a) Go to zero
b) Go down
c) Go up
d) Nothing

4-3 With all sensors disconnected from a functional differential thermostat, a jumper wire is placed across the collector sensor terminals. What should happen?

a) The pump should stop running
b) The pump should run for a few minutes, then stop
c) The pumps should start running
c) Nothing

4-4 The wiring to a collector sensor is shorted out. What will happen?

a) The pump will run all the time
b) The pump will run only at night
c) The pump will never run
d) The pump will run normally

4-5 The wiring to a storage sensor is shorted out. What will happen?

a) The pump will run all the time
b) The pump will run only at night
c) The pump will never run
d) The pump will run normally

4-6 A storage high limit of 160 degrees is desired for a 10K control. What resistance should be used to “impersonate” this temperature?

a) 13,500 ohms
b) 10,000 ohms
c) 1,700 ohms
d) 1,170 ohms

4-7 Which is the most accurate and useful dial or readout when testing controls and sensors?

a) Resistor color code
b) Analog ohmmeter
c) Control tester dial
d) Control digital readout

4-8 Which of these is a symptom of an airbound collector loop in a closed-loop system?

a) The collector feed temperature is greater than the return temperature
b) The collector feed and return temperatures are the same
c) Erratic control operation
d) The pump’s current draw is much too low

4-9 A piping loop has no apparent flow, but the pump’s current draw is correct. What is the most likely problem?

a) Tripped circuit breaker
b) Worn pump bearings
c) Closed valve in loop
d) Locked pump rotor

4-10 If the flow rate of the storage loop of a drainback system is in the correct range, what should the temperature change in that loop be in degrees F?

a) 1
b) 5
c) 25
d 50

4-11 What is water with a high percentage of magnesium or calcium compounds called?

a) Hard
b) Corrosive
c) Aggressive
d) Acidic

4-12 What should be done to a pressure reducing valve on a makeupwater system feeding a glycol loop?

a) Set it for 5 PSI
b) Set it for 35 PSI
c) Open it all the way up
d) Close it off and tag it

4-13 Which of these is compatible with synthetic oils?

a) Hydrin
b) EPDM
c) Standard pipe dope
d) Butyl rubber

4-14 What causes phantom leaks in glycol loops?

a) Pressure relief valves
b) Temperature and pressure relief valves
c) Automatic air vents
d) Brass fittings on copper tubing

4-15 What can cause galvanic corrosion in a copper piping loop?

a) Small amounts of cast iron
b) Galvanized pipe hangers
c) Stainless steel pipe hangers
d) Teflon-based thread sealants

4-16 At night the collector return line is cooler than the feed line. What is the most likely problem?

a) Reverse thermosiphoning
b) Airbound loop
c) Short in collector sensor wiring
d) Short in storage sensor wiring

# 5.0
# REPAIR

What You Will Find in This Chapter

This chapter includes information on the repair or replacement of solar system components. The first section lists common components and whether to repair or replace them. Then, specific procedures for particular components are described. The chapter ends with a sample repair record sheet.

System inspection and troubleshooting are not covered. This chapter assumes the reader has already determined what the problem is, and needs information on how to fix it.

The information in Appendices A, B and C will be helpful in performing the operations described in this chapter. A worksheet is provided at the end of this chapter.

## 5.1 REPAIR OR REPLACE?

Some components, such as collector glazings, can never be repaired, and must be replaced. Others, such as mounting racks, are usually repaired rather than replaced.

However, most components can be repaired or replaced. In general, the decision to repair or replace is based on:

- o availability of replacement parts
- o lead time for replacement parts
- o cost of replacement parts
- o difficulty of repair

Table 5-1 lists system components and describes the usual choice of repair or replacement.

TABLE 5-1: Typical Repair/Replace Choices

| COMPONENT | REPAIR | REPLACE |
|---|---|---|
| Collectors | | |
| Glazings | Never | Always |
| Frames | Rarely | Usually |
| Glazing Seals | Sometimes | Sometimes |
| Header Gaskets | Sometimes | Sometimes |
| Interior Insulation | Never | Always |
| Mounting Hardware | Sometimes | Sometimes |
| Frame Grounding | Usually | Rarely |
| Sensor | Never | Always |
| Absorber Plate (Leaking) | Sometimes | Usually |
| Absorber Plate (Coating damage) | Rarely | Usually |
| Exterior Piping | | |
| Insulation | Usually | Rarely |
| Hangers | Sometimes | Sometimes |
| Leaks | Usually | Rarely |
| Valves | Rarely | Usually |
| Interior Piping | | |
| Insulation | Usually | Rarely |
| Hangers | Sometimes | Sometimes |

TABLE 5-1 (Continued)

| COMPONENT | REPAIR | REPLACE |
|---|---|---|
| Interior Piping (cont) | | |
| Leaks | Usually | Rarely |
| Valves | Rarely | Usually |
| Pressure Gauges | Rarely | Usually |
| Thermometers | Never | Always |
| PT Plugs | Never | Always |
| Expansion Tanks | Rarely | Usually |
| Pumps, Wet Rotor | | |
| Impellers (usually part of cartridge) | Never | Always |
| Rotors (usually part of cartridge) | Never | Always |
| Stators ("Cans") | Never | Always |
| Volutes | Rarely | Usually |
| Capacitors | Never | Always |
| Flanges | Rarely | Usually |
| Flange Gaskets | Never | Always |
| Body Seals | Never | Always |
| Pumps, Separate Motor | | |
| Motors | Never | Always |
| Volutes | Rarely | Usually |
| Impellers | Rarely | Usually |
| Bearings | Never | Always |
| Capacitors | Never | Always |
| Flanges | Rarely | Usually |

TABLE 5-1 (Continued)

| COMPONENT | REPAIR | REPLACE |
|---|---|---|
| Pumps, Separate Motor (cont) | | |
| Flange Gaskets | Never | Always |
| Shaft Seals | Never | Always |
| Heat Exchangers | | |
| Tubes (Scaled) | Always | Never |
| Tubes (Leaking) | Usually | Sometimes |
| Shells | Sometimes | Sometimes |
| Bonnets | Sometimes | Sometimes |
| Bonnet Gaskets | Never | Always |
| Anode | Never | Always |
| Insulation | Usually | Rarely |
| Hangers | Usually | Rarely |
| Closed Loop Fluids | | |
| Glycol (Low pH) | Rarely | Usually |
| Glycol (Poor inhibitor condition) | Rarely | Usually |
| Glycol (Low concentration) | Sometimes | Usually |
| Glycol (Contaminated) | Never | Always |
| Synthetic Oils (Contaminated) | Never | Always |
| Silicone Oils (Contaminated) | Never | Always |
| Controls, Sensors and Sensor Wiring | | |
| Control (Entire unit) | Rarely | Usually |
| Control (Circuit card only) | Never | Always |
| Sensors (All types) | Never | Always |
| Sensor Wiring | Usually | Sometimes |

TABLE 5-1 (Continued)

| COMPONENT | REPAIR | REPLACE |
|---|---|---|
| Storage Tanks | | |
| Tank (Leaking through wall) | Rarely | Usually |
| Insulation | Usually | Rarely |
| Drain Valve | Never | Always |
| Anode | Never | Always |
| Dip Tubes | Sometimes | Sometimes |
| T & P Relief Valve | Never | Always |
| Dielectric Fittings | Never | Always |
| Sensor Wires (Under jacket) | Rarely | Usually |
| Sensors (All types) | Never | Always |
| Back-up Heating Element | Never | Always |
| Back-up Heating Thermostat | Never | Always |
| Back-up Heating Element Wiring | Rarely | Usually |
| Manway Gasket | Never | Always |
| Legs, Cradle, Etc. | Sometimes | Sometimes |

## 5.2 REPAIR AND REPLACEMENT PROCEDURES

### 5.2.1 Solar Collectors.

Glazings

Most collector glazings are textured, tempered, low iron glass. Whenever possible, replace broken lites with the same type and brand. (A lite is one sheet of glass.)

**WARNING!**

**Always use tempered glass!** Standard glass will fail rapidly, and may cause personal injury or death if large pieces fall off the roof.

Tempered glass is cut to size before tempering. Any attempt to cut tempered glass will break it.

Handling and Moving Glass Glazings

Leave replacement glazings packed as they were shipped until you are at the job site. Repack unused replacements before transporting them back to storage.

Always carry glass vertically (upright) (Figure 5-1). Be very careful not to scratch the glass. A deep scratch will cause the glass to shatter the first time it gets hot. If possible, use suction cups with handles designed specifically for moving glass.

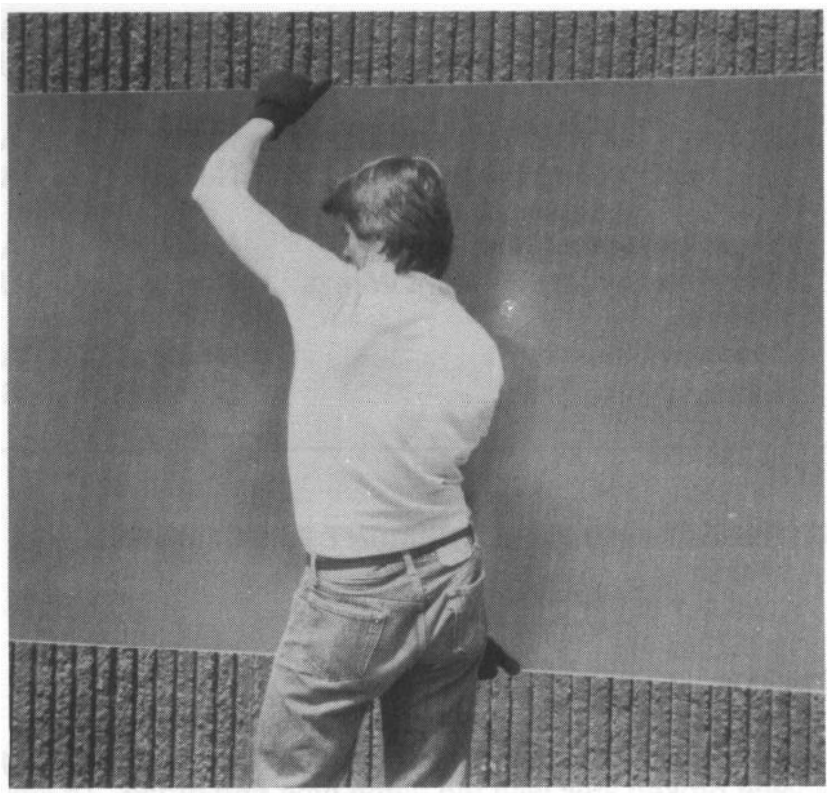

FIGURE 5-l
Carrying Glass
Properly

Remove the small pieces of broken glazing with a shop vacuum. Avoid rubbing off the black absorber surface with the hose or the glass "crumbs." Remove the cap strips holding down the glazing, and remove any pieces of glass and old sealant.

**WARNING!**

Small splinters and sharp edges are mixed in with the safer "crumbs" of broken tempered glass. Always use gloves and eye protection when removing broken glazing and installing new glazing. Be careful not to come in direct contact with hot system components.

If the textured, rougher side of the new glazing is dirty, clean it. Any window cleaning product can be used, but a vinegar/water solution works just as well (10% vinegar, 90% water.) Dry carefully and avoid streaking.

If a gasket was used, remove it from the collector. Notice which way the gasket was installed on the collector.
bottom of the gasket, mark the side which faced the outside.

If a new gasket is available, discard the old one. If the old one is to be reused, remove any glass still in the gasket. Check the gasket for UV radiation damage and other defects.

If there is no "right-side up," put the older-looking side on the textured, inner side of the glass. If there is a "right-side up," put that side on the smooth outer side of the glass. (Figure 5-2)

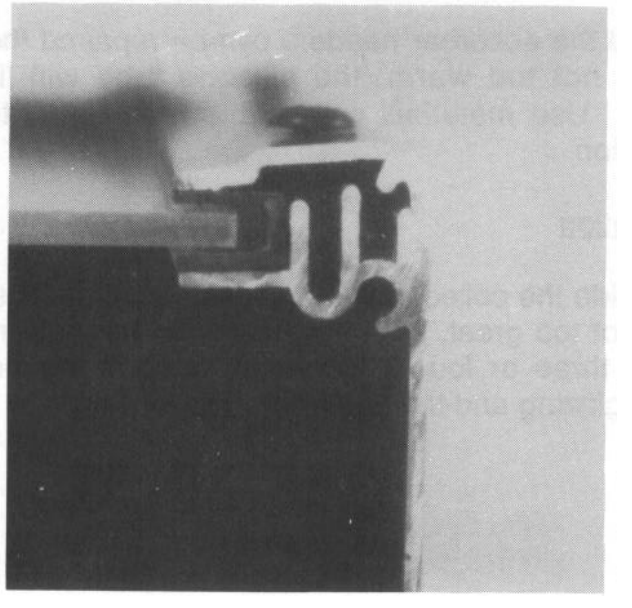

FIGURE 5-2
Typical Glazing Assembly
(Loosened for Clarity)

Install the new glazing in the collector with the smooth side facing outward. Make sure the gasket is on evenly and completely. Move the glazing to center it in the collector frame. Make sure it fits without binding.

If silicone or other sealant was originally used to seal the collector, apply it. Install the glazing cap strips. Tighten them down enough to slightly compress the gasket, but not tight enough to distort the strips or pinch the glazing.

Frames

If the connections between frame components are sound, use silicone sealant to weatherproof them. If joints are loose and can be tightened, apply silicone to the surfaces before tightening the collector up.

If necessary, use angle braces and self-tapping screws to hold corners together. Although this is not a very attractive method, it is effective. Cover the screw heads and the brace/collector junction with silicone sealant.

Use stainless steel, cadmium-plated or aluminum hardware for repairing aluminum frames. Do not use galvanized hardware. Contact with zinc will corrode aluminum within one year.

Seals and Gaskets

If the glazing gasket is leaking, but the glazing is not broken, apply silicone sealant to suspicious spots. Make sure the collector surfaces are clean and dry.

Leaks around the absorber headers can be repaired the same way. Make sure the headers are not too warm: the silicone tube will list the highest application temperature. Use materials compatible with 400°F temperatures. Replace the piping insulation.

Interior Insulation

Insulation inside the collector is usually replaced because it is wet. If the amount of moisture is not too great, so the insulation is not soaking wet, the simplest thing to do is to drill three or four 3/16” weep holes in the bottom edge of the collector between the glazing and the absorber. (Figure 5-3)

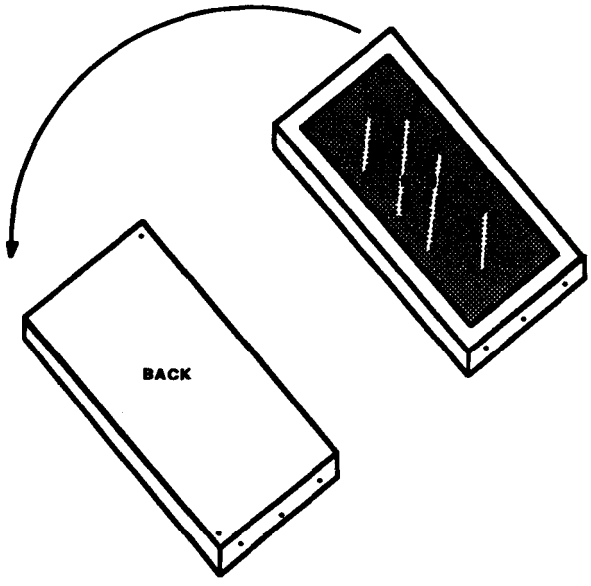


FIGURE 5-3
Weep Hole
Locations

Insulation with more moisture requires opening up the collector and wiping off the inside of the glazing. If dry weather is anticipated, leave off the glazing for a week and let the collector dry itself out.

If rain or snow is possible, or if the insulation is completely soaked, remove it and replace it.

Sometimes, wet fiber glass insulation can be removed from behind the absorber plate by tearing it off like a paper towel being torn off the roll. Make sure the replacement insulation completely fills the void.

Foam insulation can be replaced with sheets of foil-faced, fiber glass-reinforced polyisocyanurate foam. Use no other foam material! Be sure the replacement insulator is the same thickness as the original insulation. There are many brands of this type of material.

Fiber glass insulation must be replaced with an unfaced low-binder batt designed for solar use. Regular unfaced fiber glass will outgas the excess binder. This will fog the glazing in a matter of a few weeks.

CAUTION

Do not, under any circumstances, use kraft paper-faced insulation of any kind in solar collectors. There is a very real possibility of the paper catching fire.

Mounting Hardware

Tighten all loose hardware, and replace any missing parts. Look across collector arrays to find and correct misaligned collectors. This is one or more collectors facing in a slightly different direction. It has been compared to the appearance of butterfly wings. (Figure 5-4)

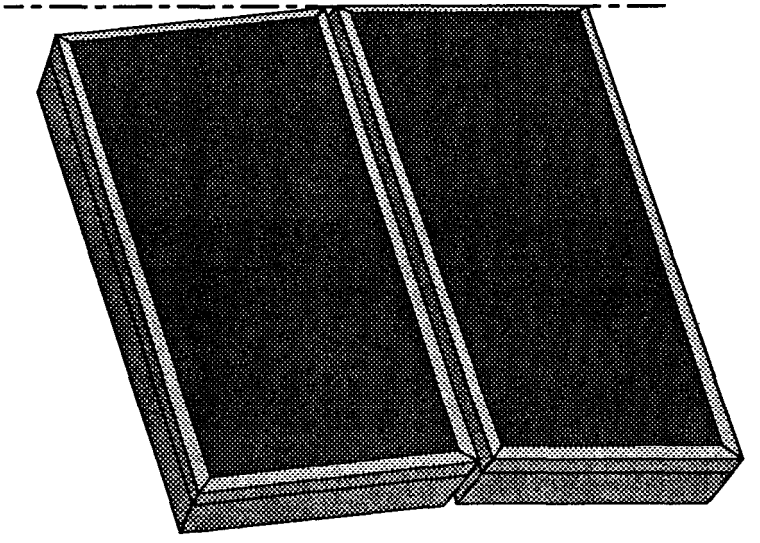

FIGURE 5-4
Misaligned
Collectors

If any of the connections between the mounting hardware and the building are loose or missing, repair them. Examine the other mounting points to determine how to do this. Remember, the biggest load on these points is upward, as the wind tries to lift the collectors.

Use silicone seal, plastic roofing cement, or pitch to reseal roof leaks. Your choice will depend on the type of roofing material and the roof/hardware connection. Roofing cement is available in tubes for use in caulking guns.

Absorber Plates

There are three ways to fix a leaking absorber plate. They are:

- o replace the entire collector
- o replace the absorber plate only
- o repair the absorber

**WARNING!**

Glycols and oils wilt burn when exposed to soldering torch flames. **Always drain the collectors before unsoldering joints!** Before heating the joints, remove the air vent to allow fluid vapors to escape. As the joint comes apart, be prepared for a brief flare. Keep a fire extinguisher with you- not down in the truck!

Replacing the collector is the easiest, but least likely method for repairing an absorber plate. If the collectors are connected with unions, drain the collector loop and remove the leaking collector. Dispose of used solar fluids in accordance with local requirements.

If the collectors are soldered together, do not saw the inlet and outlet headers apart without making sure you are not destroying the headers of adjacent collectors. Also, the leaking absorber may be repaired and used as a spare, unless it has been made useless by cutting off its headers.

If a coupling with a stop was used to connect the collectors, use a tubing cutter to cut the coupling right at the stop. Remove the leaking collector. Heat and remove the half-couplings left on the headers of the adjacent collectors. Use a heat shield to protect header grommets. A swing-open escutcheon plate can be used as a shield.

FIGURE 5-5
Cutting Out the
Leaking Collector

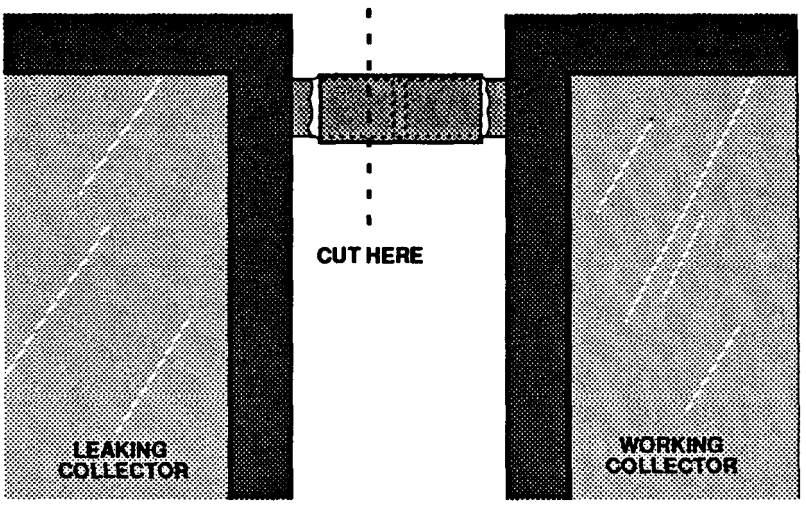


FIGURE 5-6
Removing the
Coupling Halves

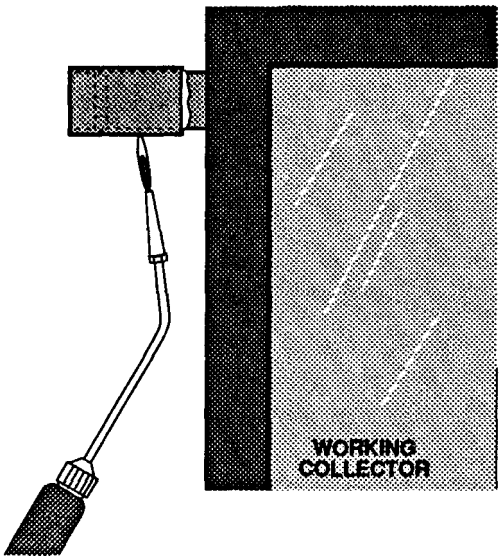


If slip (repair) couplings without stops were used, cut through them with a tubing cutter (Figure 5-5). Make the cut 1/4" from the coupling center, in the direction of the leaking collector. This gives you a better chance to avoid shortening the headers of the good collectors. You will very likely have to cut through both the coupling and the leaking collector's header.

Heat and remove the half-couplings on adjacent collectors (Figure 5-6). Use a heat shield to protect header grommets. A swing-open escutcheon plate can be used as a shield.

If hoses or special collector connectors were used, disconnect and save them. Unless you are absolutely sure new hose or connectors are available that are compatible with the solar temperatures and fluid, it is better to reuse the old ones.

To replace or repair the absorber plate, it is easiest to remove the entire collector. Disassemble the collector until the absorber can be removed. Store the empty collector in a dry, safe location until the repair is completed.

Before installing a new absorber into the collector, it may be worthwhile to pressure test it. Use compressed air, and keep the absorber out of the sun. One hour is an adequate time period. The test pressure should be approximately the same as that of the collector loop pressure relief valve setting.

If you know the brand of absorber or collector, Tables 5-2 and 5-3 will be of help. If you do not know, move ahead to the general repair information which follows the tables.

TABLE 5-2: Repairability of Various Absorbers Manufactured for Use by Others

| TYPE OR BRAND | REPAIRABLE? | NOTES |
|---|---|---|
| Phelps Dodge | Yes | Very thin fin |
| Rollbond on flat patch | Rarely | Requires braze |
| Sunstrip | Sometimes | Only at riser to header joints |
| Terralite | Yes | Very thin fin |
| Thermafin | Sometimes | Only at riser to header joints |
| Western Solar Development | Yes | Fairly thin fin |

TABLE 5-3: Repairability of Various Absorbers
Manufactured by Collector Manufacturers

| TYPE OR BRAND | REPAIRABLE? | NOTES |
|---|---|---|
| American Solar King SG-15 | Rarely | Rollbond plate |
| Colt C-141 | Yes | Fairly thin fin |
| Daystar 1400, 1600, 1600 TLS | Yes | Fairly thick fin |
| Gulf Thermal | Yes | Fin wrapped around tube |
| Grumman Sunstream 121, 232, 221, 232, 321A, 332A | Yes | May be hard to remove fin |
| Morning Star | Yes | Fairly thin fin |
| Revere | Sometimes | Only at riser to header joints |
| Sunworks | Yes | Fairly thin fin |
| U.S. Solar | Yes | May be hard to remove fin |
| Western Solar Development | Sometimes | Some models use “D” shaped tube |

If the leak is at the joint between the header and a riser, it must be rebrazed. Carefully remove any absorber fin which covers the leaking joint. On some absorbers it is possible to use the “feather of a torch on the back side to melt solder holding the fin on the tubes, then bend the fin back. On other absorbers, careful work with tin snips will expose the joint.

The joint must be thoroughly cleaned and rebrazed (Figure 5-7). Use phoscopper or silver bearing brazing alloy. Do not use solder! Even silver solder will not hold up to the combination of temperature and mechanical stress this joint undergoes.

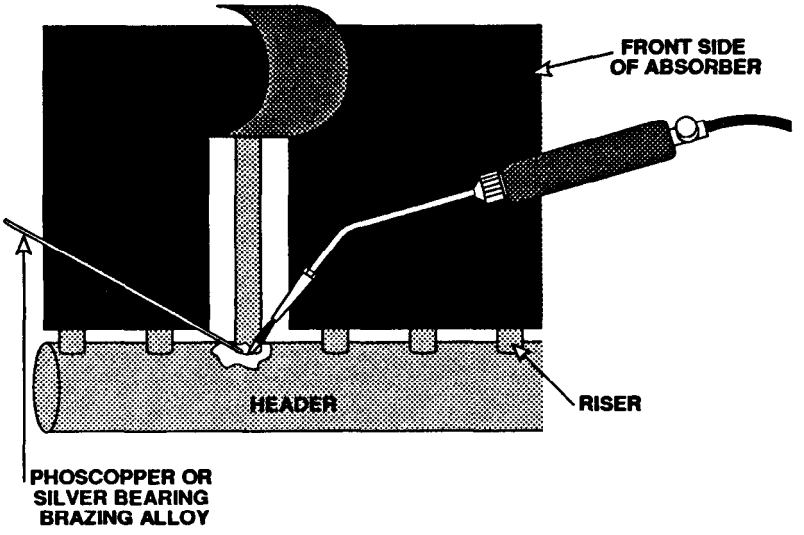


FIGURE 5-7
Rebrazing a
Header/Riser Joint

If possible, replace the fin. Do not bother to completely reattach it to the tubes. It is not normally possible to restore the thermal connection after removing the fin.

If the leak is in the riser tube, and the fin can be removed from the tube, it can be repaired. The best approach is to cut out the fin and the damaged portion of the tube. Braze (not solder!) a section of new tubing into place with two couplings (Figure 5-8).

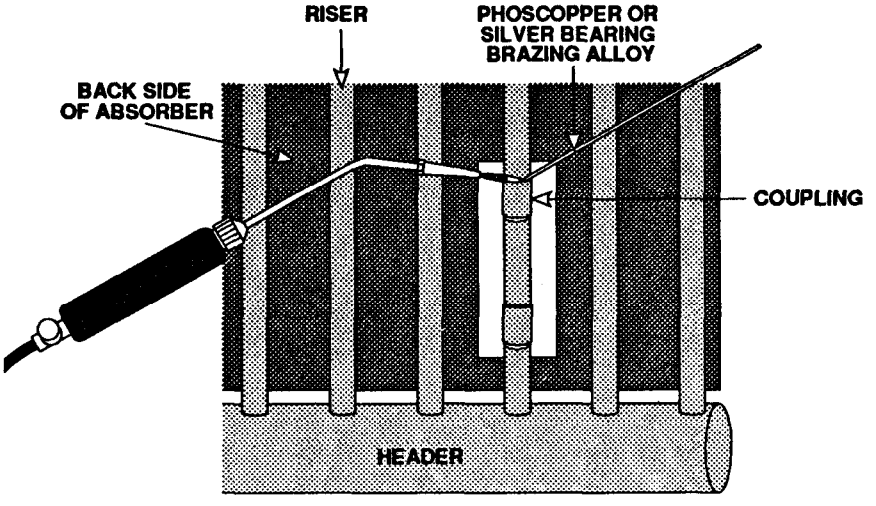


FIGURE 5-8
Repairing a Riser
Leak

Before replacing the absorber in the collector, spray black high-temperature (barbecue or stove) paint on the insulation where the hole in the fin will be. Use the same paint on the repaired section of the tube.

Before installing a repaired absorber into the collector, it may be worthwhile to pressure test it. Use compressed air, and keep the absorber out of the sun. One hour is an adequate time period. The test pressure should be at approximately the same pressure as the collector loop pressure relief valve release pressure.

**Frame Ground**

Every collector with a sensor must have its frame grounded. This ground helps prevent damage to the system control.

The typical grounding method is simple. A short piece of 12 or 14 gauge copper wire is stripped at each end about two inches. One end is hose clamped to an absorber plate header. The other end is connected to the collector frame. The frame connection usually involves the collector mounting hardware (Figure 5-9).

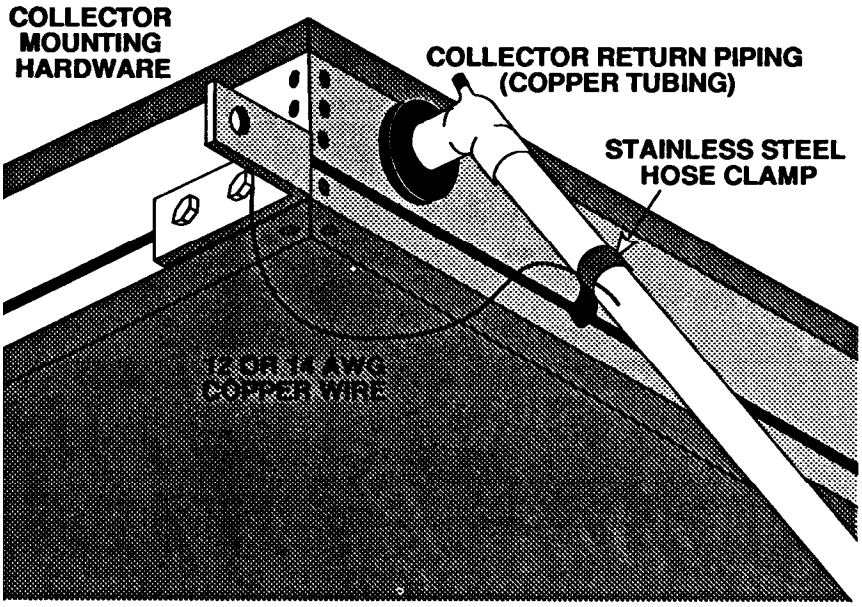


FIGURE 5-9
A Properly Grounded Collector

After installing or reconnecting this ground, use an ohmmeter to make sure there is a solid electrical connection between the absorber piping and the frame. Cover the junction between the aluminum frame and the copper wire with silicone sealant to reduce galvanic corrosion.

At the mechanical room, use the ohmmeter to confirm that the collector loop piping is connected to ground. If it is not, hose clamp another section of copper wire to the collector return line. Run this over to a mechanical ground, usually the same one used for the building electrical system.

Remember that the surface of anodized or painted aluminum does not conduct electricity. Anodized aluminum may not appear to have any coating.

Collector Sensor

Three important things to remember about replacing the collector sensor are:

- Keep the sensor close to the absorber for more accuracy
- Insulate the sensor for more accuracy
- Protect the sensor from weather and mechanical stress

Install the differential thermostat's "collector" sensor at the collector outlet header. One acceptable method is to push the "tongue" of the sensor under the grommet of the outlet pipe. Use a stainless steel hose clamp to secure the sensor (Figure 5-1 0). Do not overtighten the clamp!

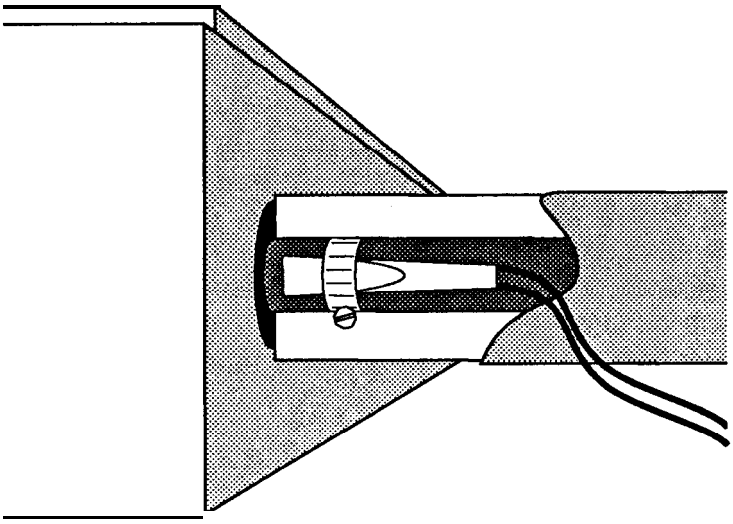

FIGURE 5-10
Collector Sensor
Installation

Heat-conductive compound can be placed on the header and sensor before placement. Two such compounds are General Electric Insulgrease™ or Honeywell heat-conductive compound (Part #107408).

Make sensor connections by twisting the wires together, then twisting on small wire nuts. After installing the wire nuts, fill them with silicone sealant. Tie a knot in the wires for strain relief.

Be sure to insulate the sensor completely, to isolate it from the cold outside air. Push the insulation up against the wall of the collector. Seal the joint between the collector and the insulation with silicone sealant.

The wires running from the sensor should be protected from sunlight and high temperatures. They must not be strapped directly to bare copper tubing. Secure them to the outside of the pipe insulation, inside the insulation jacket.

To "tie" up the wires, use cable ties rather than tape. Do not use uninsulated staples, as it is very easy to short circuit the sensor lines with regular staples.

The type of sensor wire which should be used is 18 to 22 gauge (minimum) multi-strand twisted pair. The multi-strand will bend and flex without breaking. Twisted pair wire is less affected by stray electrical noise. Cable exposed to sunlight or high temperatures should have an appropriate jacket. Teflon is one good choice.

### 5.2.2 Interior and Exterior Piping.

Insulation

All exterior pipe insulation 'must be covered with adequate insulation and a weatherproof jacket. This includes the short pipes between collector headers, and the unused (and capped) headers (Figure 5-1 1).

Elastomeric insulations, such as Armaflex™ or Rubatex™, do not require jackets, but must be thoroughly painted or covered to protect them from UV radiation (Sunlight).

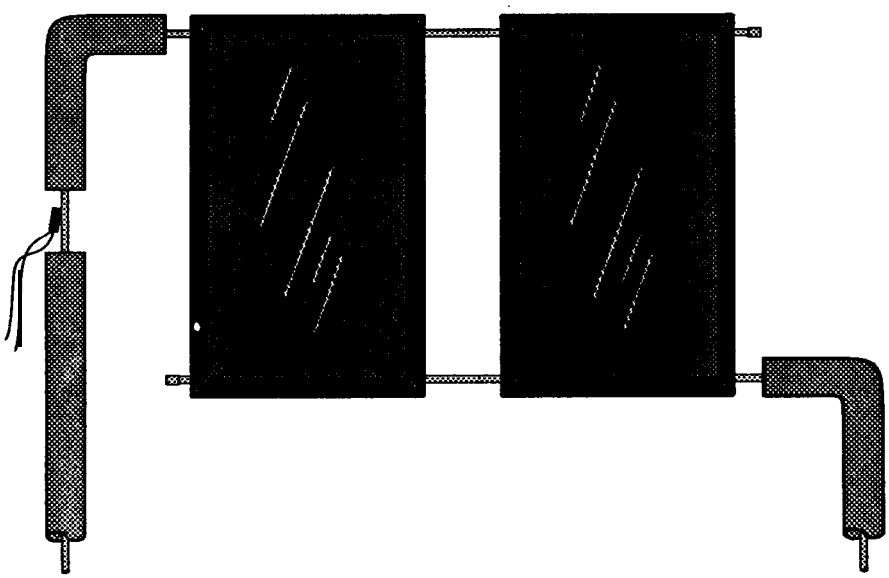

FIGURE 5-11
Inadequate Pipe Insulation

Fiber glass and rigid foams must be jacketed. Section 2.5.8 has more information on pipe insulation and jacketing materials.

Interior piping must also be insulated, but jacketing or painting is only required for appearance, color coding, or protection from people.

Adequate insulation means at least R-4, but it is desirable to have R-7 or more.

Use materials and techniques similar to those used originally to repair piping insulation. Do not use duct or electrical tape to hold the insulation together. This method will fail in a few months, making the system look and perform worse than ever.

## Hangers

Replace missing hangers, and tighten loose ones. Be sure galvanized hangers are not in direct contact with copper tubing.

The galvanic corrosion resulting from direct contact will “eat” the solder out of the joints. Provide adequate cradles for the pipe insulation to keep it from being crushed.

Leaks

Leaking soldered joints must be repaired with a high-temperature solder, not 50/50 (Tin/Lead)! 95/5 (Tin/Antimony) can be used on all copper to copper joints. Joints involving bronze should be repaired with 96/4 (Tin/Silver) solder. The use of 50/50 will result in joint failure within a few months, and may violate plumbing code.

**WARNING!**

Glycols and oils will burn when exposed to soldering torch flames. **Always drain the collectors before un-soldering joints!** Before heating the joints, remove the air vent, to allow fluid vapors to escape. As the joint comes apart, be prepared for a brief flare. Keep a fire extinguisher with you- not down in the truck!

Threaded joints in piping filled with glycols or synthetic oils must use teflon-based thread sealants. Teflon tape, or Rectorseal #100 are two good choices. The only appropriate sealant for threads exposed to silicone oils is fluorosilicone.

Brazed joints, and flared or compression fittings are all acceptable, but are rarely used because they are less convenient than soldered or threaded joints.

Be sure to completely reinsulate the repaired piping.

**Valves**

Normally, valves with leaking stem seals can be repaired by tightening the packing nut. If the leak is caused by an incompatible solar fluid, the valve should be replaced with one with more compatible materials.

Leaks at valve inlets or outlets should be repaired the same way other leaks are. Be careful to drain the solar fluid before applying a torch flame. Do not overheat the valve and warp the seat or damage the internal seals.

Follow the recommendations for thread sealants and solder types in the preceding section. If one valve or piping component in a loop is leaking, it may be worthwhile to replace all similar units in that loop while the fluid is drained.

Whenever replacing a valve in a horizontal line, drop the valve handle 15º from horizontal as shown in Figure 5-12. This allows any leakage to drip off the handle and be seen, rather than soaking into the insulation undetected. Globe valves must not be used!

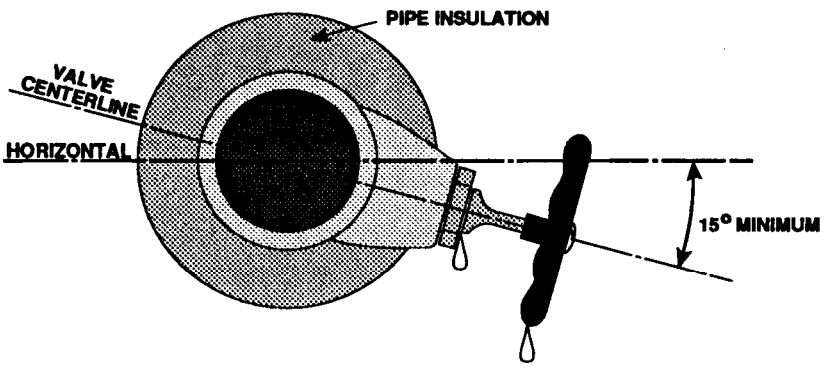


FIGURE 5-12
Valve Installation

CAUTION

Unless a component is specifically for use in solar heating systems, confirm that body materials, construction, seals and gaskets are appropriate for the solar fluid being used and the highest potential temperatures and pressures for the system. As an example, most of the standard gate valve packings are quickly degraded by synthetic oils. The inevitable result is a loss of fluid, leading to more serious consequences.

Collector Loop Flow Balancing

Ball valves are usually installed in the inlets of collector arrays for balancing flow rates. Every separate array of collectors should have a thermometer or the equivalent in its outlet. When all the outlet temperatures are identical, the flow rates are balanced. This works even when the arrays have different numbers of collectors.

Balancing must be done on a sunny day when the system is operating. Reduce the flow slightly through the array with the lowest outlet temperature. Wait three or four minutes, and recheck all the array outlet temperatures. Continue balancing and waiting until all the temperatures are within five degrees of each other.

NOTE

Close the balancing valves as little as possible. Reducing the flow rate through the collectors reduces their efficiency.

**WARNING!**

Never install valves in a way that could allow the isolation of the solar collectors from pressure relief valves and/or expansion tanks. Collectors have been completely destroyed by bursting in this way.

**Pressure Gauges and Thermometers**

Broken, leaking or inaccurate pressure gauges and thermometers are almost always replaced. The only practical exception to this is the occasional pressure gauge which can be recalibrated.

A recalibratable pressure gauge has a removable glass lens and ring (to hold the glass on). It also has a screwdriver slot in the center of the gauge needle or elsewhere on the face (Figure 5-13).

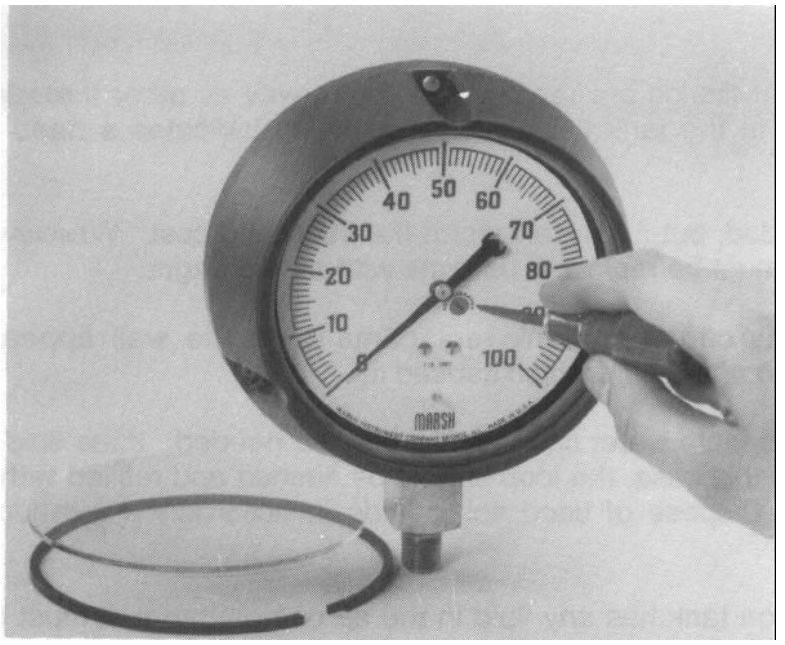


FIGURE 5-13
A Recalibratable
Pressure Gauge

Courtesy of Marsh Instrument Co.

To make an adjustment, let all the system pressure out, and turn the calibration screw until the needle indicates zero.

Pressure Relief Valves

When replacing pressure relief valves, be sure the release pressure of the replacement is the same as the system designer specified. Repipe discharge piping following local code requirements.

CAUTION

Never use a temperature and pressure relief valve in the collector loop of closed loop systems. The valve will open at some time, due to normal temperatures, causing a loss of solar fluid.

## Expansion Tanks

Leaks at expansion tank inlet fittings are repaired the same way as other threaded fittings. Generally, a crack in the tank wall at the inlet fitting indicates a need to replace the entire tank.

Sometimes they can be welded, but it is rarely worth the effort and cost. Whenever a tank without a diaphragm must be replaced, use one with a diaphragm.

Tank wall leaks are usually cause for tank replacement. If the wall appears corroded, check the condition of the fluid which caused it.

If the tank holds water, appropriate water conditioning may be needed. If the fluid is a glycol, it may be acidic. In this case, the loop should be flushed and refilled with a fresh glycol/water mixture. Dispose of used solar fluids in accordance with local requirements.

If a diaphragm-type expansion tank has any fluid in the air compartment, it must be replaced. This is usually found by momentarily depressing the stem of the schrader valve. Any fluid discharged from the air compartment means the diaphragm has broken, or is disconnected from the tank wall.

Be aware that sometimes fluid leaking from a loose connection at the top of the tank will “sneak” down the back side of the tank. The dripping fluid at the bottom schrader valve fitting may not really be coming out of the bottom of the tank.

Occasionally, a schrader valve will loosen up, releasing all the pressure from the air compartment. Use an automotive valve stem tool to tighten up the schrader valve, and repressurize the air side of the tank to the correct pressure listed in Table 5-5.

NOTE

Refilling the air side to the appropriate pressure must be done when there is no fluid pressure on the other side of the diaphragm. See Table 5-5 for further information on system charging pressures.

CAUTION

Whenever an expansion tank is installed in a loop with a pump, it must be on the suction side of the pump. Installation of an expansion tank on the discharge side of the pump can result in pump cavitation and damage.

Air Vents

Automatic (float type) air vents are probably the most incorrectly applied component in solar systems. (Figure 5-14) One difficulty is that no American manufacturer of automatic air vents will advocate their use outside. Another problem is incompatibility with solar fluids. Finally, very few automatic air vents are capable of withstanding the pressures they are exposed to in solar applications.

*Courtesy of Bell and Gossett*

FIGURE 5-14
An Automatic Air Vent

Automatic air vents can be used only in piping loops containing water. When used with solar fluids, an automatic air vent will eventually vent enough fluid vapor or leak enough to render the system inoperative. In many cases, the vent seals are not compatible with the fluid or the pressure. The end result is a stained roof and an inoperative, sometimes damaged, solar system.

The high points of closed-loop systems containing solar fluids must be vented, but with manual (coin) vents. (Figure 5-15) The vent should be a simple needle valve, with absolutely no plastic seals, seats, wafers, or other non-metal components. During installation and maintenance procedures, service personnel can open the valve to check for air or to let it out. Otherwise, the vent stays closed.

FIGURE 5-15
A Manual Air Vent

*Courtesy of Bell and Gossett*

The high points of draindown and drainback collector loops, and the high point of storage water loops should use a high-pressure automatic air vent. Confirm that the vent is capable of handling at least 125 PSI, although 150 PSI is better. Check the pressure relief valve setting to ensure protection for the vent.

The cap on automatic air vents must not be fully tightened. It is there only to prevent the entry of dust which would clog the mechanism. The vent must be installed vertically.

The air vent should be constructed of metal. Plastic air vents are not recommended because catastrophic failure is common.

### 5.2.3 Dry Rotor Pumps (Lubricated by Oil or Grease).

General

Before making any repairs on these pumps, follow the procedures in Section 4.3.4 to use an ammeter to determine the most likely problem.

Most repairs begin by removing the pump motor from the pump itself. There are minor variations, but to do this:

- o turn off power supply, and disconnect wiring from pump
- o close isolation valves or flanges (or drain the loop)
- o loosen the shaft coupling set screws
- o unbolt the motor from the pump assembly

In all pump repairs, information provided by the pump manufacturer will offer considerable help with tricks and shortcuts. Be sure new gasket and seal materials are compatible with the fluid being pumped.

Motors and Motor Mounts

Field personnel rarely make internal motor repairs. Most major pump manufacturers operate or recommend authorized motor repair stations.

One component which may be replaced in the field are motor mounts. If over-oiling has occurred, the rubber mount rings may degrade and require replacement. This is a fairly common cause of shaft misalignment. Also check for degraded rubber mounting feet at the base of the motor.

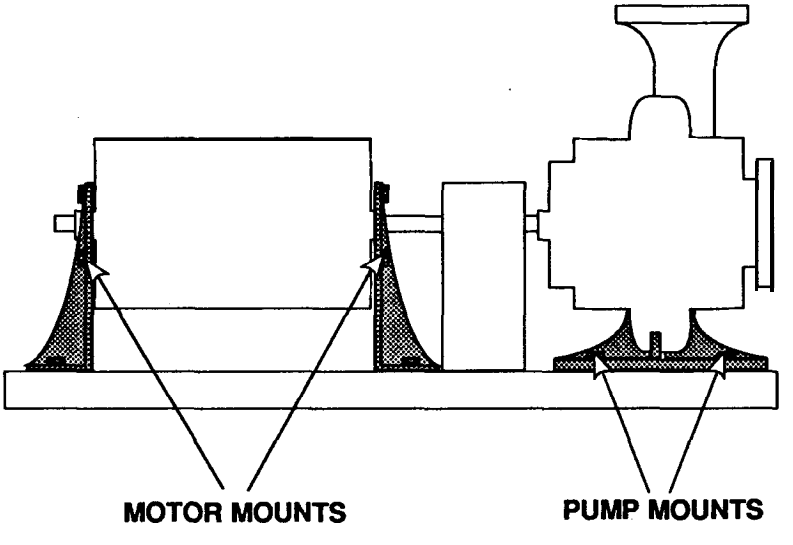


FIGURE 5-16
Pump and Motor Mounts

To replace the mounts, remove the motor from the pump shaft coupling. Check both front and rear motor mounts. Inspect the coupling, seals and bearings for signs of wear or leakage while the motor is off the pump. Remove or disassemble the motor mount brackets, remove and replace the old rubber rings, and reassemble the unit (Figure 5-16).

Couplings

If the coupling is broken, completely replace it. Do not attempt to repair or only partially replace broken couplings. Try to determine why the coupling broke. Pump misalignment is a frequent cause.

Bearings

To reach either sleeve or ball bearings, loosen the coupling and remove the motor. Depending on the pump, it may be necessary to remove a complete assembly containing the bearings from the pump volute or motor.

Many bearing assemblies or cartridges can be completely replaced. This is generally the best method. Consult the manufacturer's service information for complete instructions, since special tools or materials may be required.

When repairing sleeve bearings with oil wicks, replace the wicking, rather than reuse the old ones.

FIGURE 5-17
Bearings
Lubricated by Oil

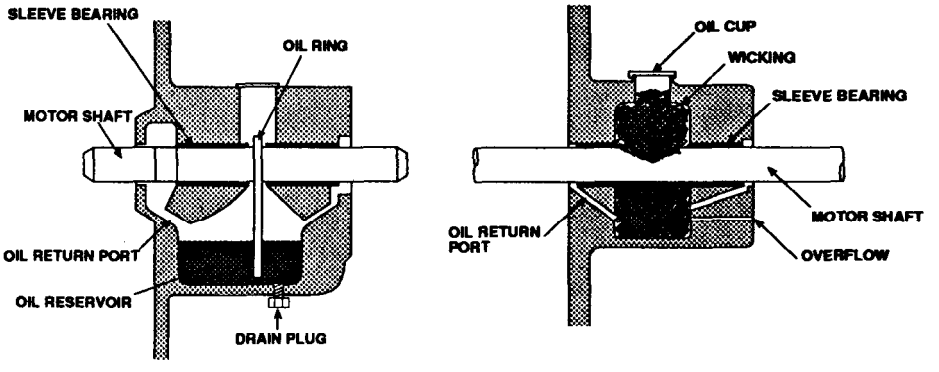

After replacing or repairing bearings, be sure to replace the lubricating oil or grease. Use exactly the same material the manufacturer recommends.

Add oil to sleeve bearings very slowly. When you see it coming from the overflow hole, or the indicator cup is full, enough has been added (Figure 5-17).

Ball bearings are greased, rather than oiled. The entire assembly of those that are permanently lubricated must be replaced when worn out.

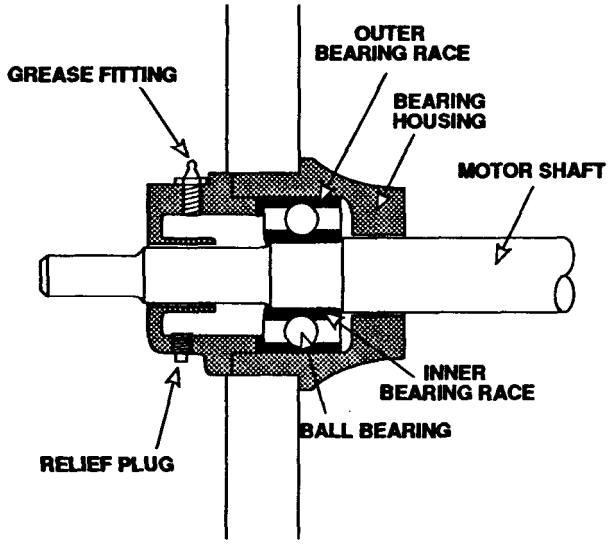


FIGURE 5-18
Bearing Lubricated
by Grease

If grease can be added, remove the relief or drain plug, and add grease with a grease gun on the fill ("zerk") fitting (Figure 5-18). Keep filling until all the old, dirty grease has been pushed out of the plug. The motor can be run during filling to make it easier, as long as the pump is not assembled and being run without liquid.

CAUTION

Do not attempt to add grease without removing the relief plug. Leaving the plug in will cause the beatings to be packed solidly. This may cause overheating and bearing failure.

Seals

Be sure the new seal material is compatible with the fluid being pumped.

Packing-type seals are normally replaced when their leakage becomes excessive. (More than two or three drops per day.) Place a sheet of clean paper under the seal to check this.

Remove the packing gland from the shaft. After pulling off the packing rings, inspect and clean the shaft. Follow the manufacturer's procedures to install the new rings (Figure 5-1 9).

> CAUTION
>
> Pumps with packing-type seals should not be used with solar fluids.

FIGURE 5-19
Packing-Type Seals

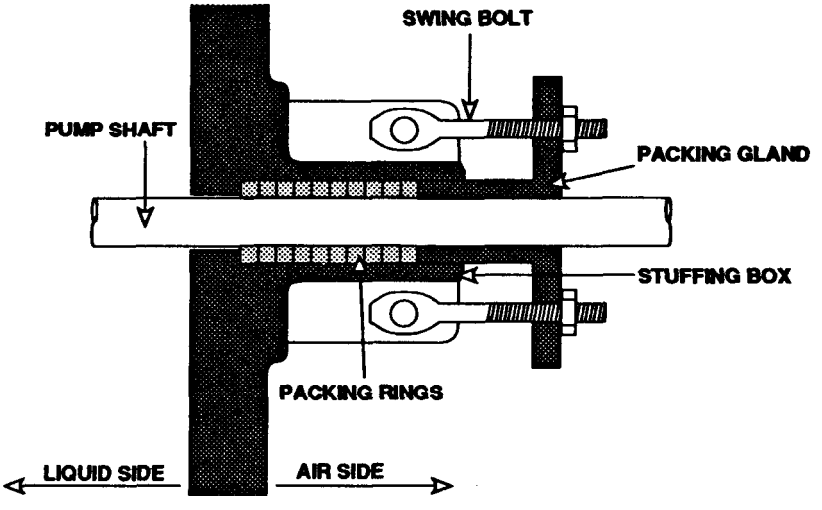


When the pump is first started, fluid should run freely from the packing. Tighten the packing gland bolts one-half turn at a time so the tightening is uniform. Tighten until the leakage is close to the manufacturer's recommendation.

When replacing mechanical seals, remove the impeller from the shaft. After pulling off the old seal, inspect and clean the shaft. Follow the manufacturer's procedures for installing the new seal and facing surfaces, if used. Be sure to compress the spring adequately when replacing the impeller (Figure 5-20).

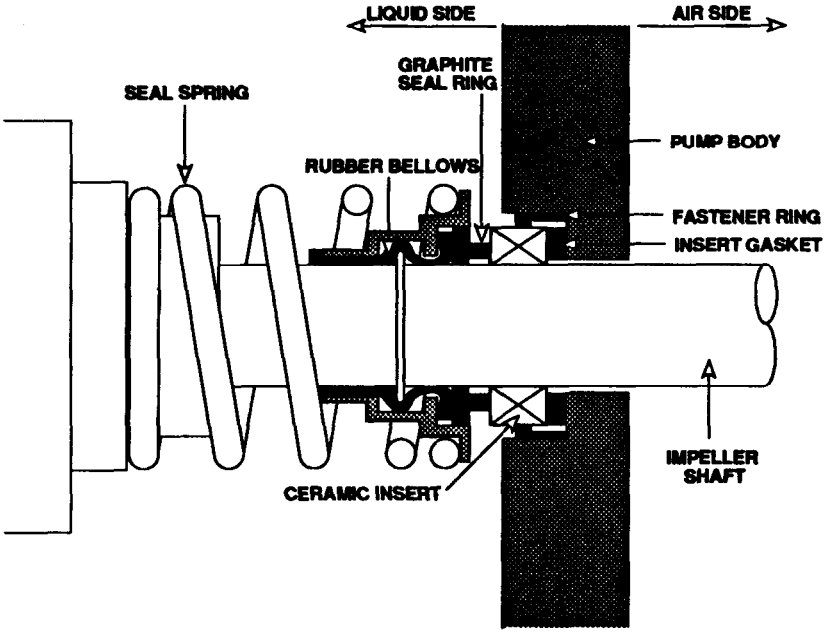


FIGURE 5-20
Mechanical Seals

## Impellers

Impellers are always replaced, rather than repaired. The only exception to this is when impeller vanes are being “shaved” to reduce pump performance. After shaving, the impeller must be rebalanced, to avoid pump damage.

## Volutes (Pump Bodies)

Cracks in the volute normally result in replacement. It may be possible to braze or weld these, but it is rarely worth the effort.

Whenever the volute is pulled apart for any pump repair, the gasket between the volute halves, or the volute and the bearing assembly, should be replaced. If old components are simply being reassembled, the old gasket can be used. However, it is better to scrape out all the old material, and use a new gasket.

FIGURE 5-21
Disassembling Pump
Volute

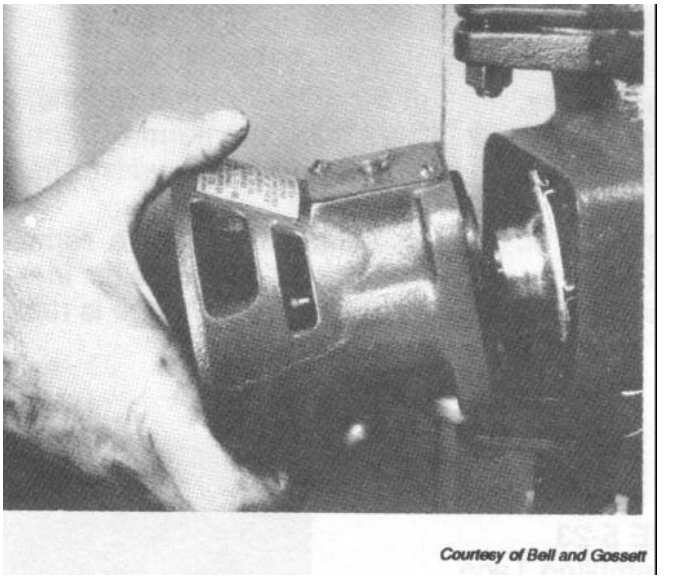


Reassemble the pump by fitting the impeller into the volute. Line up mounting holes, making sure the motor and bearing assembly are right side up.

If you have trouble seating the assemblies, a little wiggling around will correctly position the impeller. Replace and tighten bolts evenly, moving from bolt to bolt while tightening. This is similar to the way lug nuts on a car are tightened.

After repairing a pump, follow the procedures in Section 3.3.4 to confirm that the pump is operating properly. Many manufacturers offer spray paint for touch-up of exterior pump surfaces.

### 5-2.4 Wet Rotor Pumps (Lubricated by System Fluid).

General

Before making any repairs on these pumps, follow the procedures in Section 4.3.4 to use an ammeter to determine the most likely problem.

Leaks in volutes or body seals are repaired the same way they are for dry rotor pumps. Bad bearings are replaced by replacement of the assembly which includes the impeller, shaft and rotor. There are no shaft seals.

The ceramic shaft used on many of these pumps can break. Sometimes the break cannot be seen, even after tearing down the pump. Sometimes the connection to the impeller is loose. If the impeller can be turned while the rotor is held still, the assembly must be replaced.

Bell and Gossett and Grundfos Pumps

Bell and Gossett series SLC and most Grundfos series U pumps have a removable plug at the rear of the motor. With the power off, unscrew the plug, and use a screwdriver to manually turn and free the motor shaft.


FIGURE 5-22
Grundfos Pump Shaft Plug

*Courtesy of Grundfos Pumps Corp.*

Once the impeller is freed, it will usually stay unstuck if the pump is run occasionally.

## Taco

If the pump has not run for a long period of time, the impeller may be stuck. The ammeter will indicate about twice the normal amperage. Try rapping the pump body (gently!) with a hammer handle or a screwdriver handle while the power is on.

Taco 006 to 0010 series pumps feature a removable cartridge. This cartridge contains the rotor, the shaft and the impeller in a waterproof cartridge. If any of these parts are defective, the entire cartridge is replaced.

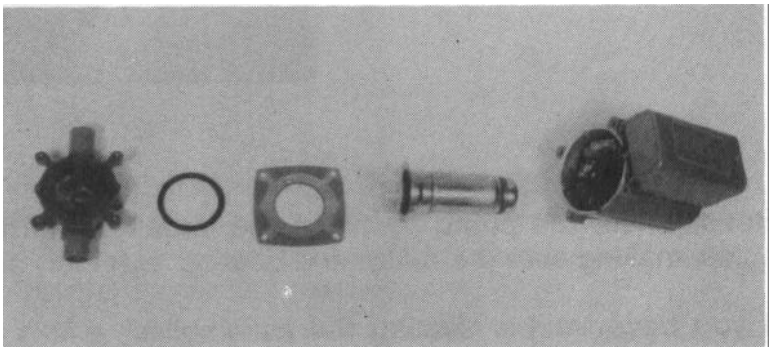

FIGURE 5-23
Disassembling Taco Pumps

Close the isolation valves or flanges. If the pump has none, drain the system. Remove the four bolts holding the volute onto the “can” (the motor housing). Some fluid will be in the cartridge. Disassemble the pump.

Before replacing the cartridge, hold the “can” upright and drop the old cartridge back in. Reapply power to the pump. (Watch out for flying fluid!) If the cartridge spins freely, inspect the inside of the volute for foreign matter or an improper casting which impeded normal impeller movement.

After repairing a pump, follow the procedures in Section 3.1.4 to confirm that the pump is operating properly.

### 5.2.5 Heat Exchangers,

**WARNING!**

Always confirm that a double wall heat exchanger is used whenever a toxic solar fluid is used, particularly with DHW systems. This information should be available from the nameplate. If a single wall heat exchanger is present, replace the toxic fluid with a non-toxic variety.

Descaling

Water with a high dissolved mineral content, "hard" water, will deposit scale on heated surfaces. This usually occurs in loops filled with "city" or well water, such as DHW systems. The water passageways of heat exchangers can be descaled to remove this material.

Some heat exchangerscan be mechanically descaled with brushes. This process requires draining and opening the heat exchanger and running the brush through each tube several times. After brushing, flush the heat exchanger with plenty of water to avoid allowing small pieces of scale to get stuck in system components.

In many cases, the scale cannot be removed mechanically. The heat exchanger may not be built for it, or the scale deposits may be too hard or thick. In these cases, chemical descaling, using various types of acid is necessary.

**WARNING!**

If the water being heated is potable (used for drinking, cooking or bathing), the descaling solution should not be toxic! If this is not possible, be sure to completely flush the heat exchanger with fresh water after descaling.

One acceptable descaling solution is phosphoric acid, sold by Stewart Hall as "Scalestrip™." Another choice is Intech 52™, which is shipped as a dry powder, and is mixed with water just before use.

Isolate and drain the water side of the heat exchanger. Turn off the solar control, to prevent the circulation of hot solar fluid.

Connect two hoses to the water inlet and outlet of the heat exchanger. Connect one hose to the outlet of a small acid pump. (Little Giant Model 2E-NVDR is appropriate.) Connect a third hose to the inlet of the acid pump.

**WARNING!**

As you might expect, even dilute solutions of descaling acid can injure eyes and skin. Follow reasonable safety practices, including eye protection and rubber gloves. Keep pure and diluted mixtures out of the reach of children and animals. Be sure to flush descaled piping and heat exchangers with plenty of fresh water before returning them to service.

Follow the manufacturer's instructions to mix the descaling acid with water. Generally, solutions should be a maximum of 7% by volume. Make enough to fill the water passageways and still have at least two inches left in the bottom of a bucket.

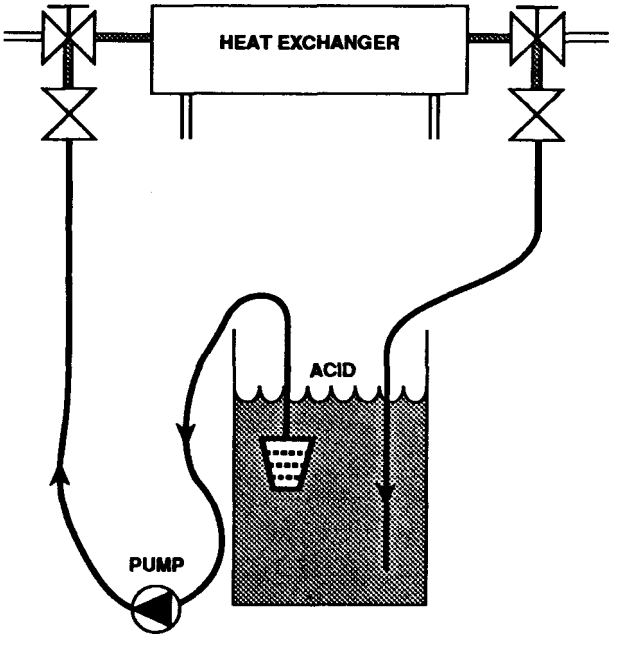


FIGURE 5-24
Descaling a Heat Exchanger

Drop the two unused hose ends below the surface of the acid. Turn on the pump, and allow the dilute acid to circulate through the heat exchanger for 15 to 30 minutes. The time interval depends on the severity of scaling.

Turn off the pump, and allow the acid to drain out of the heat exchanger as much as possible. Hold up the acid pump to allow it and the hoses to drain. Disconnect the pump from the hose leading into the heat exchanger.

Dispose of the used acid properly. If it is phosphoric acid, such as Scalestrip, it is biodegradable and can be flushed down a toilet. Reflush the toilet several times to clear the acid from traps. If the acid is not biodegradable, dispose of it in accordance with local requirements.

Connect the heat exchanger inlet hose to the fresh water supply. Flush the heat exchanger for at least five minutes. Once every trace of acid has been purged out, disconnect the hoses. Repipe the heat exchanger, and purge the air from it.

Rinse out both the acid bucket and hoses. Pump fresh water though the acid pump briefly and drain it before returning it to storage. Dispose of the used acid-water mixture in accordance with local requirements.

Bonnets

Most solar heat exchanger bonnets are bronze or cast iron. Cracks in the metal can sometimes be repaired by brazing or welding. Leaks in the gasket usually require replacing the gasket. Since the fluid against the gasket is water, no special materials are required.

Corrosion or cracks at the inlet or outlet ports of the bonnet usually indicate the need for a replacement bonnet.

The bonnet and associated piping should be adequately and completely insulated after repairs are made.

Tubes and Bundles

Broken, corroded or burst tubes in coil-in-tank or tube-in-tube heat exchangers cannot be repaired. Tube-in-tube heat exchangers must be replaced. Most coil-in-tank heat exchangers are not removable, so the entire tank must be replaced.

Brass or copper tubes in shell and tube heat exchangers can be repaired by plugging leaking tubes. Determine the internal diameter of the tubes. Have one inch long plugs machined from brass or bronze 0.004” smaller than the tubes’ i.d.. A five degree taper over one-half inch of the plug aids insertion.

FIGURE 5-25
Plugging Tubes to Repair a Heat Exchanger

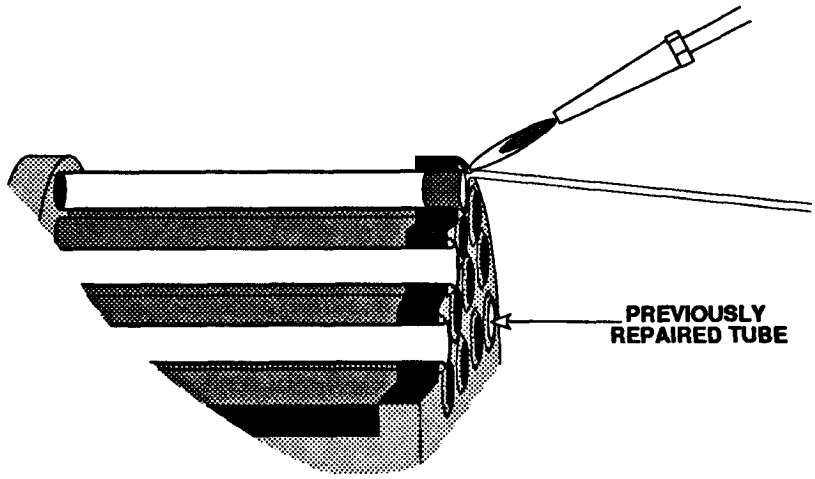


Remove both bonnets and dry out the insides of the leaking tubes. A hair dryer or heat gun works well. Use a small fitting brush to clean out the inside of each end of the tube. Flux the insides of the tubes and the plugs. Use 96/4 (Tin/Silver) solder to seal the plugs into each end.

Note that this method only seals off the broken tubes to keep heat transfer fluid out of the other tubes. If more than 10% of the tubes are leaking, it is best to replace the entire tube bundle. Sometimes it is easier to replace the entire heat exchanger. This depends on cost and lead time for tube bundles.

Shells

Most solar heat exchanger shells are steel. Cracks in the metal can sometimes be repaired by brazing or welding.

Corrosion or cracks at the inlet or outlet ports of the shell usually indicate the need for a replacement shell. Sometimes it is easier to replace the entire heat exchanger. This depends on cost and lead time for a replacement shell.

The heat exchanger and associated piping should be adequately and completely insulated after repairs are made.

Anodes

Any heat exchanger with steel components exposed to fresh water must have a sacrificial anode. If the anode is gone, or nearly gone, a replacement should be obtained and installed.

If an exact replacement cannot be obtained, it may be possible to saw off a one or two inch chunk of water heater anode and place it inside the shell. Use a standard threaded plug to close up the port in the heat exchanger.

The heat exchanger and associated piping should be adequately and completely insulated after repairs are made.

Drainback Tanks

Leaks at seams in steel or stainless steel drainback tank shells can usually be welded. Cracks at fittings or leaks in heat exchanger coils normally require replacement.

A common problem with drainback tanks is a low solar loop water level. With the system off, add distilled or deionized water until the tank overflows. Tap water can be used, but this should not be the usual practice.

### 5.2.6 Solar Fluids,

General Information About Draining and Flushing

It is not always necessary to drain the fluid from the system to “repair” it. Sometimes, glycols can be restored to good conditions by adding corrosion inhibitors. This “reinhibiting” can usually be done without completely draining the system.

If water is used to flush out debris or corroded particles from a loop which contains glycol-based fluids, follow the instructions carefully about discarding the “hung-up” water in the loop when it is refilled. Always dispose of used solar fluids properly, in accordance with local requirements.

Oils contaminated with water or foreign matter can sometimes be cleaned up by filtration, without draining the fluid.

CAUTION

Oil-filled loops must never be flushed with water. Water is a contaminant that can never be completely removed.

Reinhibiting Glycols

Reinhibiting glycol-based fluid is usually only practical when the system has over 250 gallons of fluid in the collector loop. Reinhibiting requires professional analysis of the current condition of the fluid, and careful determination of the amount of inhibitor to add to the fluid.

Depending on the inhibitor being used, it may be possible to add inhibitor directly into the system with a charging pump. In other cases, it may be necessary to drain out five or ten gallons of fluid from the system, mix this with inhibitor, and return the fluid to the loop. In either case, it will be necessary to recharge the system, following the instructions near the end of this subsection.

Some inhibitors, such as dipotassium phosphate, do not dissolve in glycol. They must be mixed with pure water, then introduced into the system, or into the rest of the fluid.

CAUTION

Glyco/water mixtures must include inhibitors to retard corrosion. Without proper inhibitors, these fluids rapidly become corrosive and damage the piping systems.

Draining and Flushing Glycol and Drainback System Collector Loops

Ideally, a drain port is in place at the lowest point of the system. Open and drain the used glycol or water.

Small amounts of glycol trapped in low points of the loop that are in the flow can be left undrained. However, fluid in “dead legs,” such as expansion tanks, must be drained out. This may require cutting into the piping or unthreading joints, but it must be done to avoid contaminating the new fluid.

Install drain plugs as you repair the piping. Use teflon-based thread sealants.

Dispose of used glycol properly, according to local requirements. Consider reusing non-toxic glycol (propylene glycol) for less critical applications, such as freeze protection for drain traps.

If a fill/drain assembly similar to the one in Figure 5-26 is not part of the system, install one. It can be placed in any part of the loop which contains the flow of all the fluid, but an ideal spot is between the system low point and the return line coming from the collectors.

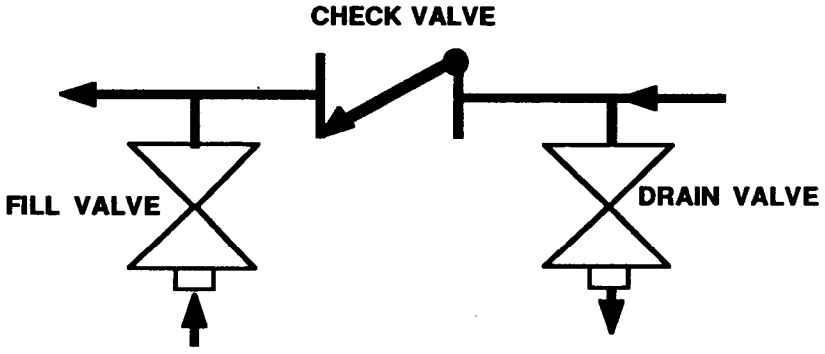


FIGURE 5-26
Fill/Drain Assembly
(using check valve)

Normally a check valve is used, as shown. A gate or ball valve can be used instead, but only if a working check valve is somewhere else in the loop. Having two check valves in the loop is acceptable, since one can back up the other.

Make sure the seals and seat of the valves used are compatible with the glycol. Use a teflon-based thread sealant.

Hook up a hose to a cold water line, and connect this to the “fill” fitting downstream of the check valve. The arrow on the check valve will point to this fitting. Connect another hose to the “drain” fitting, and run it over to a suitable drain. Use approved methods to collect and dispose of used glycol solution.

Normally city pressure has adequate flow and pressure to flush out the system. Occasionally, a booster pump is needed in the “fill” line, to push the water to the top of the system. If possible, flush the loop on a cloudy day to avoid thermal shock of the collectors.

Flush the system with city water until the fluid coming from the “drain” fitting is dear. Make sure the water is moving through all parts of the loop. On a sunny day, all the collectors should be at the same (fairly cool) temperature.

Turn off the water, disconnect the fill hose, and allow the system to drain. Drain out any dead legs. Small amounts of “hung-up” water in the loop can be flushed out during recharging. Dispose of used glycol properly, according to local regulations.

Automatic Water Make-Up

If glycol-filled loops are equipped with automatic water make-up, dose gate valves, if possible, and tag them so they will remain closed.

Draining and Flushing Oil Loops

In many cases, foreign matter and small amounts of water can be filtered out of the oil without draining it all out. Use a hydraulic fluid filter on a charging system as shown in Figure 5-27.

If it is necessary to drain the system, a drain port should be in place at the lowest point of the system. Open and drain the used oil.

Small amounts of oil hung up in parts of the loop that are in the flow can be left undrained. However, fluid in “dead legs,” such as expansion tanks, must be drained out. This may require cutting into the piping or unthreading joints, but it must be done to avoid contaminating the new fluid.

**WARNING!**

Oils will burn when exposed to soldering torch flames. **Always drain the system before unsoldering joints!** Before heating the joints, mechanically open the loop, to allow fluid vapors to escape. As the joint comes apart, be prepared for a brief flare. Keep a fire extinguisher with you- not out in the truck!

Install drain plugs as you repair the piping. Use an appropriate thread sealant for the fluid being used (see Appendix E).

Dispose of the used oil properly, according to local requirements.

If a fill/drain assembly similar to the one in Figure 5-26 is not part of the system, install one. It can be placed in any part of the loop which contains the flow of all the fluid, but an ideal spot is between the system low point and the return line coming from the collectors.

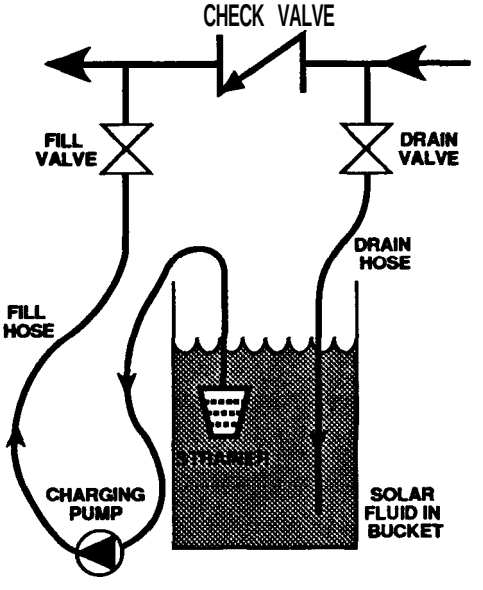


FIGURE 5-27
Fill/Drain Assembly with Charging Pump and Filter

Normally a check valve is used, as shown. A gate or ball valve can be used instead, but only if a working check valve is somewhere else in the loop. Having two check valves in the loop is acceptable, since one can back up the other.

Make sure the seals and seat of the valves used are compatible with the solar fluid. Use an appropriate thread sealant.

Flush the system with a cleaning solution recommended by the oil manufacturer, or with new oil. This process is identical to charging a system, described below, except that the cleaning solution is drained afterward. Always handle and dispose of the cleaning solution property, in accordance with local regulation.

CAUTION

Oil-filled loops must never be flushed with water. Water is a contaminant that can never be completely removed.

Flush the system until the fluid coming from the “drain” fitting is clean. Make sure the fluid is moving through all parts of the loop. On a sunny day, all the collectors should be at the same temperature. Their temperature will rise slightly throughout the process.

Refilling (Recharging) Glycol or Oil Loops

Before recharging the system, make sure the expansion tank capacity is adequate for the system and fluid. This is especially important if the system has a history of relief valve blow-off. Information on expansion tank sizing can be found in Diamond reference 1, in the bibliography.

It may be necessary to adjust the air pressure of diaphragm-type expansion tanks before filling the system. The correct air pressure is listed in Table 5-4.

Before introducing a new fluid, pressure test the piping system with compressed air. Use air rather than water to prevent damage to pipe insulation or building components if leaks appear. Also, water must never be introduced into an oil loop.

Test at 75 PSI for a period of two to three hours. If pressure relief valves or other components cannot withstand this pressure, isolate them or remove them from the system. A lower test pressure can be used for a longer period of time, but it is not as good a test.

During the test, the pressure will fluctuate slightly (5 to 10 PSI) as the system heats up and cools down. Leaks can be found by spraying or brushing a liquid soap and water solution on joints and looking for bubbles. Commercial leak detection fluids can be used instead.

If there is any doubt about the system leaking, continue the test overnight.

After the test is complete, let the air out of the system.

**WARNING!**

If traces of oil or glycol are in the system, and the collectors are hot, a thick fog of vaporized fluid may come out with the air. It is preferable to open a vent or valve located outdoors to release the air pressure.

To charge the system, connect up a charging system as shown in Figure 5-27. The charging pump should be a shallow well jet pump, or a jet pump with a shallow well adapter capable of developing at least 50 PSI in a deadhead (no flow) situation. (Figure 5-28) A filter or strainer should be between the bucket and the charging pump inlet. Change the filter after every five systems.

Following Figure 5-27, one hose will run from the bucket or drum to the inlet of the charging pump, going through a filter or strainer somewhere along the way. Another runs from the outlet of the charging pump to the fill port of the fill/drain assembly. This is the downstream port that the check valve arrow points to. The final hose is connected to the drain port, and leads back to the bucket.

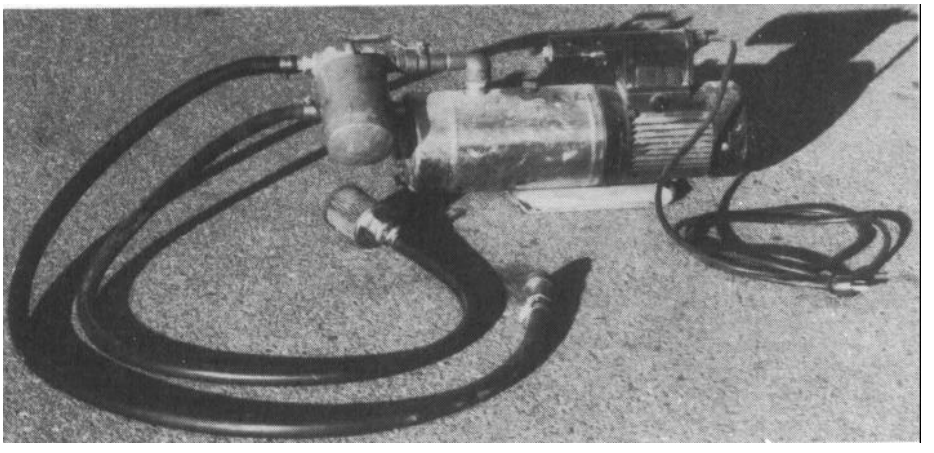

FIGURE 5-28
Typical Charging Pump

For some systems, especially prepackaged DHW systems, special fittings will be required for fill/drain assembly connections. (Figure 5-29) For many others, the fittings end in standard hose threads. Washing machine hoses are useful for draining and filling.

FIGURE 5-29
Special Fill/Drain
Assembly Fittings

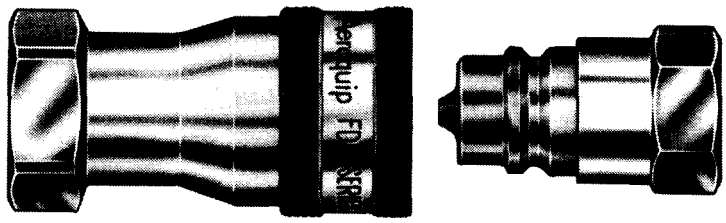

*Courtesy of Aeroquip Corp.*

The fluid in the bucket is pulled through the charging pump and into the system. The check valve forces the fluid to move up the feed line to the collectors, up through the collectors, back down the return line and back into the bucket (The same way boiler/baseboard loops are initially filled).

If a gate ball valve is used instead of a check valve, it must be closed during the charging process.

The drain port hose is submerged in the fluid to make it easy to see any air bubbles coming out of the system. This is similar to the process of bleeding automobile brakes.

Pour enough fluid into the bucket to fill it to within about two inches from the top of the bucket. Make sure all vents are closed, and turn on the charging pump. Very quickly, air will come out the drain hose (Figure 5-30).

FIGURE 5-30
Air Coming From the
Drain Hose

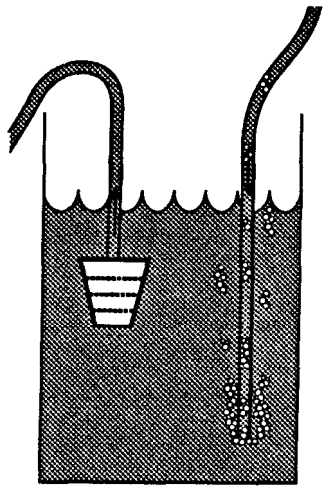

If the air is coming out too violently and fluid is being blown out of the bucket hold the hose above the fluid until liquid starts to come out of it.

**WARNING!**

The fluid coming out the discharge hose can be extremely hot! Use insulated gloves to hold the hose or clamp it securely to the side of the bucket. Use eye protection.

If water was used to flush the system, the first fluid to come out of the system is mostly water. Discard this "hung up" water in a separate bucket, then move the discharge hose back to the "good" fluid bucket.

As the pump pulls fluid out of the bucket, keep pouring more in (Figure 5-31). Keep the bucket at least half full at all times.

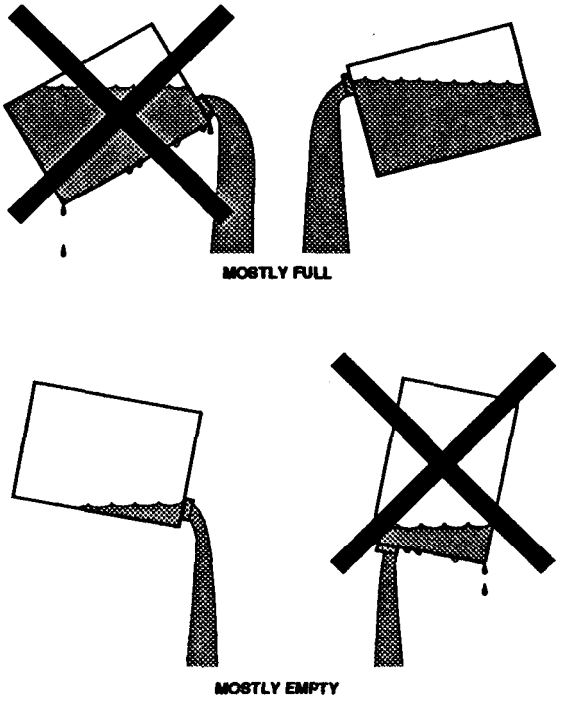


FIGURE 5-31
Correct and Incorrect Pouring from a 5 Gallon Drum Without a Spout

If the fluid level never drops, the charging pump needs priming, or is faulty. If the fluid level drops for a while, then stops, and no fluid is coming out of the discharge hose, the pump is not strong enough to push fluid to the top of the collectors.

It is a good idea to turn the solar control to the “On” position while charging, to help the process and purge air from the pump.

CAUTION

Make sure any other pump that will also be turned on is either disconnected or filled with fluid, so it is not running while dry.

After the system has been completely filled, and all the air has been purged, no additional bubbles will be seen. Run the charging system for at least another ten minutes. The fluid should be completely free of surface bubbles, and have no sign of milkiness. A few extra minutes spent can save a return trip to recharge the system again.

Close the drain fitting, and allow the charging pump to build the pressure up about five pounds higher than the level indicated in Table 5-5.

Once the pressure is reached, close off the fill valve, and turn off the charging pump. Leave the pump and hoses connected.

Turn off the system control if it was turned on. Open the gate or ball valve, if one was used in the fill/drain assembly.

After filling a glycol loop, test a small sample of the fluid. Note the pH, glycol percentage and reserve alkalinity in the operation and maintenance record for that system. Information on testing is in Section 3.1.6 in the inspection chapter.

After the system has been off for about ten minutes, briefly open the air vent on each array of collectors. A small amount of air may be present. If more than a brief hiss of air comes out, charge the system for at least ten minutes more and check the vents again.

If the charging process seems to be going well, but air still shows up in the system, check the suction hose and fittings on the charging pump for leaks. A jet pump can suck in air and still pump fluid.

Drain enough fluid to drop the system pressure down to the recommended pressure from Table 5-4. Be sure to add one-half PSI for every 1000 feet of altitude above sea level.

It may be desirable to use the charging pump to return fluid from the bucket into the original container. Disconnect and drain the hoses.

Determining the Final Fill Pressure

To use the fill pressure chart, determine the following:

- the total fluid volume of the system
- the number and size of the expansion tanks
- the temperature of the system fluid, during the charging process
- the system's elevation above sea level, to the nearest thousand feet

TABLE 5-4: Component Fluid Capacities

| **Component** | **Fluid Capacity** |
|---|---|
| Typical 3' by 8' collector | 1.00 gallon |
| Typical 4' by 8' collector | 1.25 gallons |
| Typical 4' by 10' collector | 1.50 gallons |
| 1/2" copper tubing (per foot) | 0.012 gallons |
| 3/4" copper tubing (per foot) | 0.025 gallons |
| 1" copper tubing (per foot) | 0.042 gallons |
| 1 1/4" copper tubing (per foot) | 0.065 gallons |
| 1 1/2" copper tubing (per foot) | 0.093 gallons |
| 2" copper tubing (per foot) | 0.161 gallons |
| 15' coil-in-tank heat exchanger | 0.18 gallons |
| 20' coil-in-tank heat exchanger | 0.24 gallons |
| Typical shell and tube heat exchanger | multiply shell diameter in inches times shell length in inches times 0.02 gallons |
| Typical tube-in-tube heat exchanger | multiply heat exchanger length in feet times 0.03 gallons |

## Determine the Total Fluid Volume

If original capacity is not known, use Table 5-4 and add up the fluid capacity of all the system components and piping. If the collectors' or heat exchanger labels indicate fluid capacity, use that number. If not, use the number in the chart. Ignore the fluid capacity of the expansion tank or tanks, pumps, valves and other components not listed above.

## Determine the Number and Size of Expansion Tank

The fill pressure table (Table 5-5) is based on expansion tanks manufactured by Amtrol, Inc. If Amtrol tanks are not used on the solar system, ask the design authority for assistance in determining the "Amtrol equivalent" of the existing expansion tank or tanks.

In Table 5-5, 1 x15 refers to a single #15 Extrol™ tank, 1x30 refers to a single #30 tank, 15+30 means a #15 and a #30, and 2x15 means two #15 tanks. Other listings follow the same pattern.

## Determine the System Fluid Temperature During Filling

Use a thermometer in the charging bucket to measure the temperature of the fluid while you are charging the system. The fill pressure chart adjusts the final fill pressure based on the fluid temperature.

## Determine the System's Elevation Above Sea Level

It is necessary to make an adjustment to both the expansion tank air pressure and the recommended system fluid pressure for the site's elevation above sea level.

TABLE 5-5: Fluid Pressure for Closed Loops

| Extrol Tank(s) Model # | Max. System Volume (Gal.) | Fluid Pressure, PSI at Fluid Temperatures of: 40°F | 60°F | 80°F | 100°F | 120°F | 140°F | 160°F |
|---|---|---|---|---|---|---|---|---|
| 1x15 | 4.7 | 32 | 33 | 34 | 35 | 36 | 37 | 38 |
| 2x15 | **9.4** | 32 | 33 | 34 | 35 | 36 | 37 | 38 |
| 1x30 | 12.5 | 33 | 34 | 35 | 35 | 37 | 39 | 40 |
| 15+30 | 17.2 | 33 | 34 | 35 | 36 | 37 | 38 | 40 |
| 2x30 | 25.0 | 33 | 34 | 35 | 36 | 37 | 39 | 40 |
| 1x90 | 44.5 | 33 | 34 | 36 | 37 | 38 | 40 | 42 |
| 30+90 | 56.0 | 33 | 34 | 35 | 37 | 38 | 39 | 41 |
| 2x90 | 88.0 | 33 | 34 | 36 | 37 | 38 | 40 | 41 |
| 3x90 | 132.0 | 33 | 34 | 36 | 37 | 38 | 40 | 41 |

Note: This chart is based upon sea level pressure. Add one-half pound to the fill pressure and expansion tank air pressure for every 1000 feet the site is above sea level.

In all cases, the expansion tank air pressure, measured with no fluid pressure, is 30 PSI at sea level. Add one-half PSI to the listed air pressure and system fill pressure for every 1000 feet the system is above sea level.

### 5.2.7 Solar Controls.

Sensor Wires

Damaged or incorrectly routed sensor wires should be replaced with multi-strand, twisted pair wire of 18 to 22 gauge. Aluminum wire can be used for runs of up to 500 feet. Above that distance, copper should be used.

Although the twisted pair design will reduce interference from electrical “noise” from other circuits, it must still be at least two feet from other conductors, controls and loads such as motors. Where it is necessary to cross other wires, do so at a right angle to minimize induced current (Figure 5-32).

FIGURE 5-32
Routing Sensor Wires

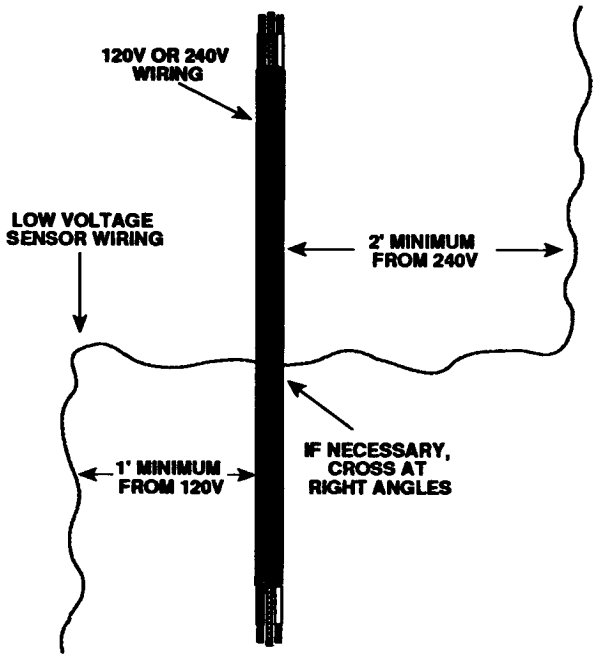


If this is not possible, or the RF noise in a particular area is too high, use shielded cable. Ground the shield to the control cabinet only!

See below for information on sensor wiring connections.

Sensors

> CAUTION
>
> Never mix 3K and 10K controls and sensors. System operation and performance will be seriously affected. See Sections 4.3.1 and 4.3.2 for more information.

Before replacing an apparently defective sensor, try to determine why it failed. For example, if the sensor location is wet, the new sensor will also fail rapidly.

Make sure the new sensor is in good thermal contact, and well insulated from the air. This is critical with sensors on either collectors or outside piping, but it is also important with sensors inside the building.

Connections on sensor wiring should be made with either the proper size wire nut, or a crimp-type solderless connector.

If wire nuts are used, screw the connector on the stripped wires, then fill the nuts with silicone sealant. Finally, tie a knot in the wires for strain relief.

If crimp-type connectors are preferred, either use one filled with silicone (such as the UI™ connector by 3M), or cover the joint between the wire and the connector after crimping it. Soldering sensor wire connections is not necessary and is not recommended. Use enough cable ties or insulated staples to support and protect the wiring. Do not use regular staples, particularly from a stapling gun. These will short out the wiring.

Check the operation of all sensors before leaving the site. Information in Section 4.3.1 describes this procedure.

In some systems, one or more freeze snap switches are installed in series or parallel with the collector sensor. In others, they are part of a separate circuit.

CAUTION

Be sure the freeze snap switches used with a control are made or recommended by the control manufacturer. Some switches open on a temperature drop, and others close on a temperature drop. The use of the wrong snap switch can allow the collectors to freeze.

**Controls**

Remember, many control problems are caused by defective or poorly installed sensors or sensor wiring. Make sure the control is really defective before replacing it.

**WARNING!**

Before working on a solar control's 120 volt wiring, disconnect the control's power supply. Do not rely on the function switch- in most controls it does not disconnect the power supply.

Some currently available controls are built with a removable printed circuit card which can be replaced more easily than the entire control. If the manufacturer and supplier agree to this procedure, it can be done.

Make sure no strands of sensor wiring are touching adjacent wires or terminals.

Follow the manufacturer's installation instructions carefully. Many controls require the use or removal of jumper strips for proper operation. When replacing one model or brand of control with another, be sure the sensors and control are compatible.

CAUTION

Never mix 3K and 10K controls and sensors. System operation and performance will be seriously affected. See Sections 4.3.1 and 4.3.2 for more information.

Check the control operation, as described in Section 4.3.2 before leaving the site.

### 5.2.8 Storage Tanks.

Entire Tank

If a pressurized tank with a stone or glass lining leaks, it should be replaced. It may be possible to repair tanks with cement, resin or epoxy linings, but only if replacement lining is available, and the leak is small enough to be repaired.

If it is necessary to open the manway on a large tank to make repairs, make sure the tank is purged of all vapors, that it is adequately ventilated and that the nuts or bolts for the manway hatch go into the tank with the worker.

WARNING!

Welding or repairing epoxy or resin linings will rapidly contaminate the air inside a tank to potentially deadly levels. These operations should only be done by experts, both to ensure the lining will not leak and for safety reasons.

## Drain Valves

Many small tanks, of 120 gallon capacity or smaller, were originally manufactured with plastic drain valves. If one of these leaks, replace it with a brass tank drain valve.

If this is not available, use a boiler drain. It may be necessary to solder together a male adapter, a two inch section of tubing and a female adapter to make an “extension” for the boiler drain.

Leaking valves on larger tanks can be replaced with identical components. Make sure you can reach the new valve conveniently, and insulate it.

## Anodes

The thread sealant used by the manufacturer on storage tanks may make anode removal difficult, but the anode is made to be removed. Use teflon tape on the replacement, to make future inspections and replacements easier.

In some areas, a chemical reaction takes place between contaminants in the water and the anode rod to produce a “rotten egg” smell. Traditionally, the solution is to remove the anode from the tank.

This will result in a much shorter tank life. Install an anode made of a different material, usually aluminum. Sometimes, this will solve the problem without shortening tank life.

If the distance between the tank top and the ceiling prohibits installing a straight anode rod, use a sectioned rod. This looks like links of sausage, and eliminates having to disconnect the tank.

Dip Tubes

If the dip tubes on a tank need replacement, use a material identical to the original one. Do not use PVC.

Remember, the purpose of dip tubes is to pick up from and deliver water to different parts of the tank. If the dip tubes are all the same length, it defeats this purpose.

Section 4.3.12 contains information on correct dip tube lengths and placement.

Temperature and Pressure Relief Valves

Leaking or inoperative temperature and pressure (T & P) relief valves must be replaced immediately. The usual standard valve for tanks connected to city water pressure is 210°F/125 PSI.

**WARNING!**

Never use a pressure relief valve on storage tanks or other pressurized water lines. A combination temperature and pressure relief valve must be used for these applications. The only exceptions are high-temperature systems. In this case, consult the system designer.

After replacing the valve, comply with local plumbing requirements concerning discharge lines. Usually, a drop line ending within 12 inches of the floor is required. However, some areas have more stringent requirements.

Be sure that any water discharged by the T & P relief valve can flow to an appropriate drain.

Insulation

Missing or inadequate tank insulation must be repaired. Another layer of tank insulation or a new jacket may be the best way to achieve this.

If the insulation is wet, it may be allowed to dry out. However, if the mechanical room floor is wet on a regular basis, the tank should be elevated to protect the insulation, as well as the tank.

If the water is coming from a known source (such as a relief valve), repair or replace the valve. Route the discharge piping to a drain or sump to keep the floor dry.

Fittings

Leaking tank fittings must be replaced to protect the tank, insulation and other mechanical room components.

Dielectric fittings (with plastic linings) must be replaced with identical units. A less-desirable alternative is to replace them with galvanized steel nipples and dielectric unions.

Replace all piping insulation right up to the tank jacket after repairing fittings.

Sensor Wires

Sensor wires are sometimes run between the tank wall and the insulation, where the temperatures occasionally rise high enough to damage the wire insulation. Replace these with new wiring run between the insulation and the outer jacket, or neatly routed outside the jacket.

Some tanks use an electric element in the top of the tank as a back-up heat source. If the sensor wiring is near the 240V electrical supply, the element or the thermostat, move it to at least 2 feet away from the 240V equipment.

**Sensor**

All storage tanks have one sensor near the bottom, used by the system control for normal on-off operation. Another sensor may be installed near the top or outlet for high limit control.

If threaded studs or clips are on the tank, use them to secure the sensor to the tank (Figure 5-33).

If there is no stud or clip, the high limit sensor may be clamped to the outlet pipe. This is the pipe leading to the load or back-up system. Use a stainless steel hose clamp, and tighten it enough to hold the sensor in good thermal contact, but not crush it (Figure 5-34).

The lower sensor, used for sensing tank temperature for differential operation must not be clamped to an outlet pipe if dip tubes are used. In this case, remove a section of tank insulation near the bottom of the tank.

Use a wire brush to clean off any loose paint or corrosion. Use thermal epoxy to secure the sensor to the tank.

FIGURE 5-33 Installing a Sensor on a Tank Wall Stud

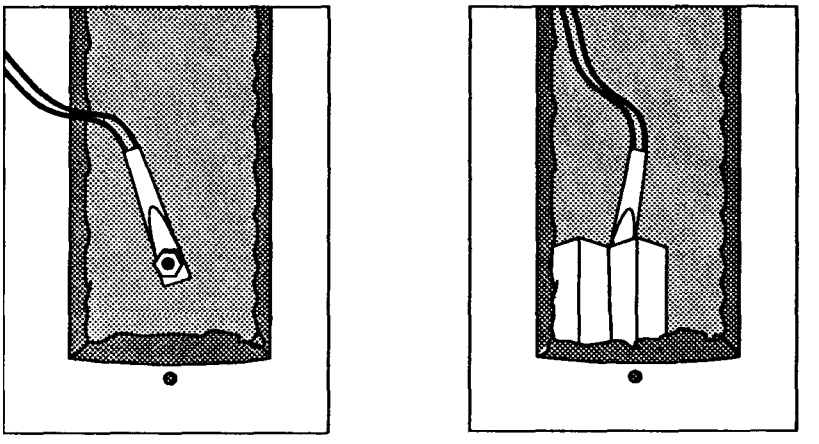

FIGURE 5-34 Clamping the High Limit Sensor to Tank Outlet

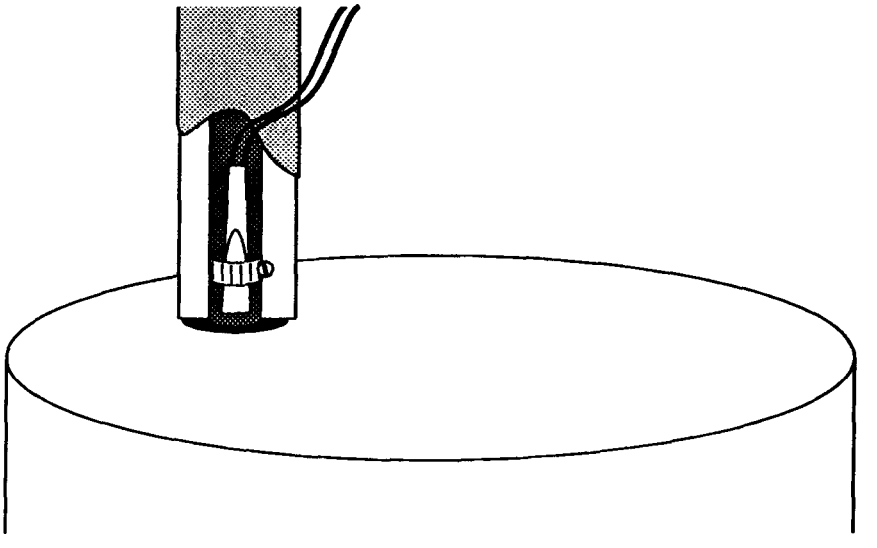

Back-Up Heating Element

Turn off all electrical power to the tank element(s). Drain the tank, unbolt the element flange and remove the old element. If the new element includes a new gasket, scrape the old one off the tank and discard it.

If no new flange is available, remove the old element flange carefully. Install the new element, using the new gasket, or gasket repair compound on an old one.

Rewire the element, fill the tank, then reapply power. Check the current draw of the new element to confirm it is working.

Back-Up Heating Thermostat

Turn off all electrical power to the back-up heating system, drain the tank, unbolt the old thermostat and remove it.

Bolt on the new element, rewire it, and fill the tank. Reapply power. Check the current draw of the back-up element(s) while turning the thermostat up and down to confirm it is working. Set the thermostat for the appropriate temperature.

## 5.3 SAMPLE REPAIR RECORD SHEET

A repair record sheet is shown on the next page. It can be copied and used directly, or it can be retyped with modifications for particular systems.

This version has a space to describe troubleshooting activities, as well as for repair activities. If a problem reoccurs, or a new one emerges, knowing what was suspicious or repaired in the past can be very helpful.

After the sheet has been filled out, file it with all the other system sheets or checklists, or with the operation and maintenance manual for that system.

| SYSTEM REPAIR WORKSHEET |
| --- |
| Site: Date:<br><br>Performed by: |
| Original symptom or complaint: |
| Items inspected or troubleshot, and findings: |
| Items repaired or replaced: |
| System performance after repair/replacement: |
| Notes: |

## 5.4 Questions for Self-study

Instructions: Choose the one answer you believe is correct. Answers to questions are in Appendix F.

5-1 What activity is possible with tempered glass?

a) Carry it horizontally
b) Carry it vertically
c) Cut it to size at the job site
d) Spray cold water on it at noon

5-2 What is the best way to weatherproof leaking collector frames?

a) Soldering
b) Welding
c) Silicone sealant
d) Riveting on sheet metal patches

5-3 Which of these types of hardware will quickly corrode aluminum collector frames?

a) Galvanized steel
b) Stainless steel
c) Cadmium-plated steel
d) Aluminum

5-4 How large should weep holes be?

a) 1/16”
b) 1/8”
c) 3/16”
d) 1/4”

5-5 Which of these is an acceptable replacement insulation to use inside a collector?

a) Polystyrene
b) Polyethylene
c) Elastomeric foam
d) Polyisocyanurate foam

5-6 What absolutely has to be done before unsoldering collectors filled with oils or glycols?

a) Drain them
b) Shade them
c) Heat them up
d) Turn off the collector loop pump

5-7 Which of these is the best material to repair an absorber plate leak?

a) Silver solder
b) Silver-bearing brazing alloy
c) 95/5 tin/antimony solder
d) 50/50 tin/lead solder

5-8 What does grounding the collector frame to the absorber do?

a) Prevents galvanic corrosion
b) Protects differential thermostat
c) Protects collector sensor
d) Protects collectors against lightning

5-9 Why is multi-strand sensor wire used?

a) Resists stretching
b) Easier to run through the roof
c) Better electrical conductor
d) Resists RF interference

5-10 What is the minimum amount of insulation for exterior solar piping?

a) R2
b) R4
c) R6
d) R8

5-11 One bank of collectors in an array has an outlet temperature much higher than all the others. What should be done?

a) Nothing
b) Reduce flow rate through that bank
c) Increase flow rate through that bank
d) Increase flow rate through the entire array

5-12 What should be done when adding grease to a pump's ball bearing assembly?

a) Confirm the relief plug is closed and pack the bearings tightly
b) Remove the relief plug and add grease until it just starts to come out of the plug
c) Remove the relief plug and add grease until it pushes out all the old grease
d) Add grease, then "top off" with oil

5-13 How can a stuck Taco 006 pump be started?

a) Remove shaft plug and turn with a screwdriver
b) Turn the power on and off rapidly
c) Momentarily apply 240 volts to the motor
d) Tap the body with a hammer handle

5-14 Which of these is a good non-toxic descaling material?

a) Phosphoric acid
b) Muriatic acid
c) Sulfuric acid
d) Soda ash

5-15 What is the maximum percentage of heat exchanger tubes that can be repaired by plugging without significantly affecting the heat exchanger's performance?

a) 5%
b) 10%
c) 15%
d) 20%

5-16 Which of these fluid's loops can be flushed with tap water?

a) Propylene glycol
b) Synthetic oil
c) Silicone oil
d) Brayco 888

5-17 What should be the air pressure on a diaphragm-type expansion tank at sea level ?

a) 20 PSI
b) 30 PSI
c) 40 PSI
d) 50 PSI

5-18 What is the minimum time you should continue charging a closed-loop system after fluid first comes out of the drain hose?

a) 60 minutes
b) 30 minutes
c) 20 minutes
d) 10 minutes

5-19 What is the fluid capacity of a system with 100 feet of 1” copper tubing, 10 typical 3’ by 8’ solar collectors and a 6” by 50” shell and tube heat exchanger?

a) 5.5 gallons
b) 10.4 gallons
c) 15.3 gallons
d) 20.2 gallons

5-20 What should the charging pressure of the system in 5-19 be at sea level, if it has 2 #30 expansion tanks when the fluid temperature is 100 ºF?

a) 30 PSI
b) 36 PSI
c) 42 PSI
d) 48 PSI

5-21 What if the same system is at 4000 feet above sea level?

a) 28 PSI
b) 32 PSI
c) 34 PSI
d) 38 PSI

5-22 Which of these is an acceptable technique when replacing sensor wires?

a) Staple them at four foot intervals to the pipe insulation
b) Run them through existing electrical conduit
c) Run them under the pipe insulation
d) Cable tie them to the outside of the pipe insulation

# 6.0
# PREVENTIVE MAINTENANCE

What You Will Find in This Chapter

This chapter contains information on standard preventive maintenance procedures. Some information on minor repairs is given; however, if major repairs are necessary, use Chapter 5, Repair. If a system has not been maintained, or has not been operational for some time, we suggest you perform a system inspection, using Chapter 3, and make necessary repairs, using Chapter 5, before starting a regular schedule of maintenance.

We assume you are familiar with the basic components and operation of solar systems. If not, reading Chapter 2, Operation, will make this chapter more useful.

The information in Appendices A, B and C will be helpful in performing the operations described in this chapter.

## 6.1 Maintenance Procedures

### 6.1.1 Solar Collectors.

Cleaning Glazings

If rain or snow do not keep the glazings clean, regular maintenance should include cleaning.

Any window cleaning product can be used, but a vinegar/water solution works just as well (10% vinegar, 90% water). Dry carefully and avoid streaking.

WARNING!

Never clean tempered glass glazings by hosing them off with water unless they are cool. The rapid cooling and thermal contraction of the glass may cause it to shatter.

Some brands of evacuated tube collectors use polished metal reflectors under the tubes. Clean these out, but be careful not to scratch the aluminum reflectors.

After cleaning, the glazing may still appear cloudy. This can be either condensation or outgassing. Condensation is typically spread unevenly on the underside of the glazing. It usually indicates a leak in the glazing gasket system or the collector frame (Figure 6-l).

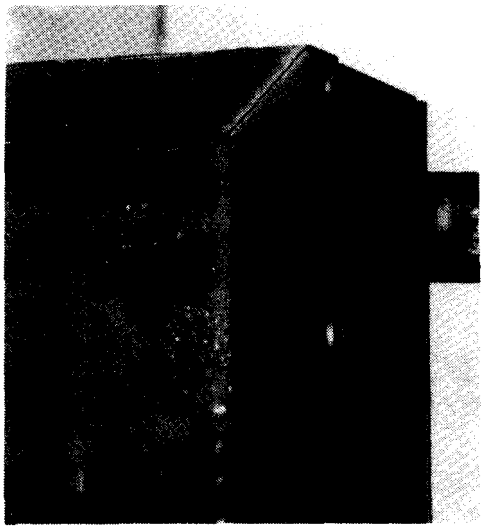

FIGURE 6-l
Condensation (top) and Outgassing (bottom)

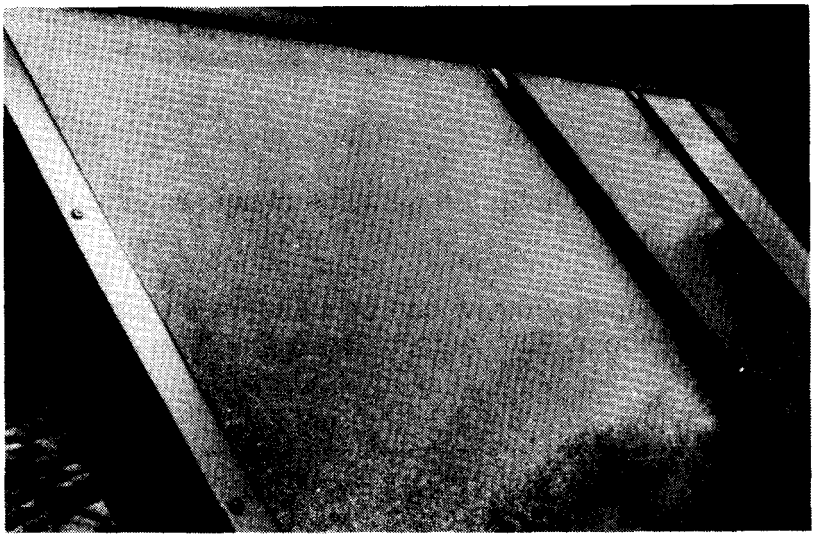

Outgassed material usually forms a uniform cloud or haze on the inside of the glazing (Figure 6-1). Information on identifying these problems is in Section 3.1.1. Methods of resolving them is in Section 5.2.1. In either case, the collector may have to be dismantled, or weep holes will have to be drilled.

Broken Glazings

A broken glazing must be repaired immediately. The interior of the collector, particularly the absorber and insulation, must be protected from the weather.

**WARNING!**

Even without a glazing, the absorber plate can be hot enough to cause serious burns.

CAUTION

If you cover the broken collector with plastic, be sure to support it well enough to keep it from sagging and touching the absorber plate.

The system can remain operational, unless the absorber plate is leaking. Detailed information on glazing replacement is in Section 5.2.1.

If there is no obvious cause for a broken glazing, check the collector frame dimensions. The frame may be out of square, and will continue to break glazings.

**WARNING!**

Small splinters and sharp edges are mixed in with the safer “crumbs” of broken tempered glass.

Tightening and Sealing Frames

If the connections between frame components are sound, use silicone sealant to weatherproof them. If joints are loose and can be tightened, apply silicone to the surfaces before tightening the collector frame.

Use stainless steel, cadmium-plated or aluminum hardware for repairing aluminum frames. Do not use galvanized hardware. Contact with zinc will corrode aluminum within one year.

Painting Frames

The frames of some older styles of collectors are made of mild steel. If these are rusting, remove the corroded material with a wire brush and repaint the frame.

Seals and Gaskets

If the glazing gasket is leaking, but the glazing is not broken, apply silicone sealant to suspicious spots (Figure 6-2). Make sure the collector surfaces are clean and dry.

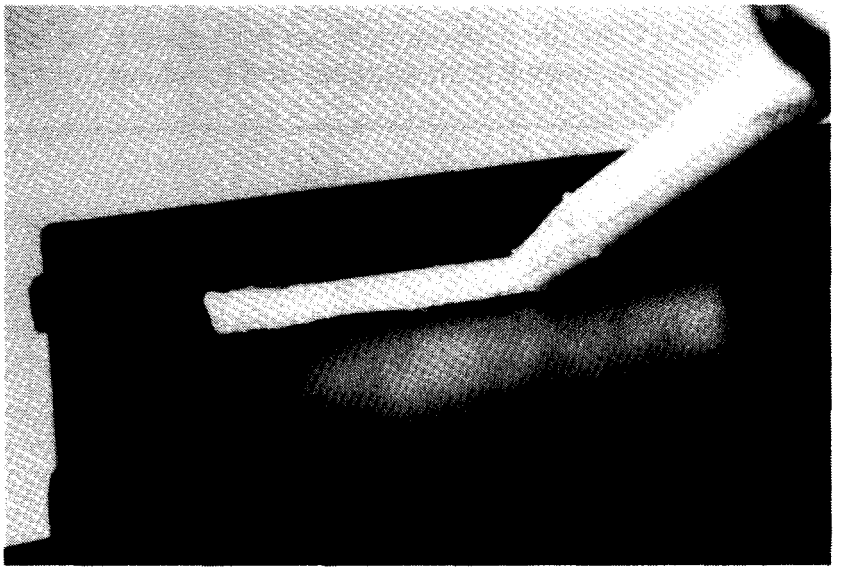

FIGURE 6-2
Resealing a Collector with Silicone Sealant

Leaks around the absorber headers can be repaired the same way. Make sure the headers are not too warm. The silicone tube will list the highest application temperature. Replace the piping insulation.

Weep Holes

If the collectors have weep holes to allow moisture to escape, make sure the collector insulation does not block them. The weep holes must be on the bottom or back of the collector, so water cannot get inside (Figure 6-3).

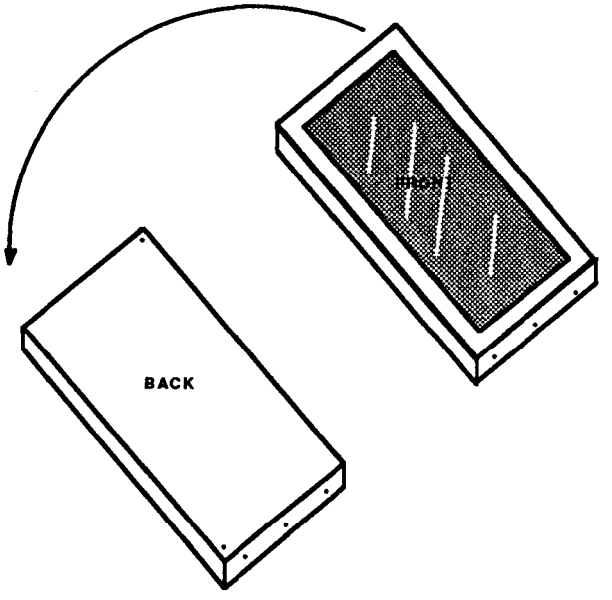


FIGURE 6-3
Collector Weep Hole Locations

Mounting Hardware

Tighten all loose hardware, and replace any missing parts. Look across collector arrays to find and correct misaligned collectors (Figure 6-4). This is one or more collectors facing in a slightly different direction. It has been compared to the appearance of butterfly wings.

FIGURE 6-4
Misaligned Collectors

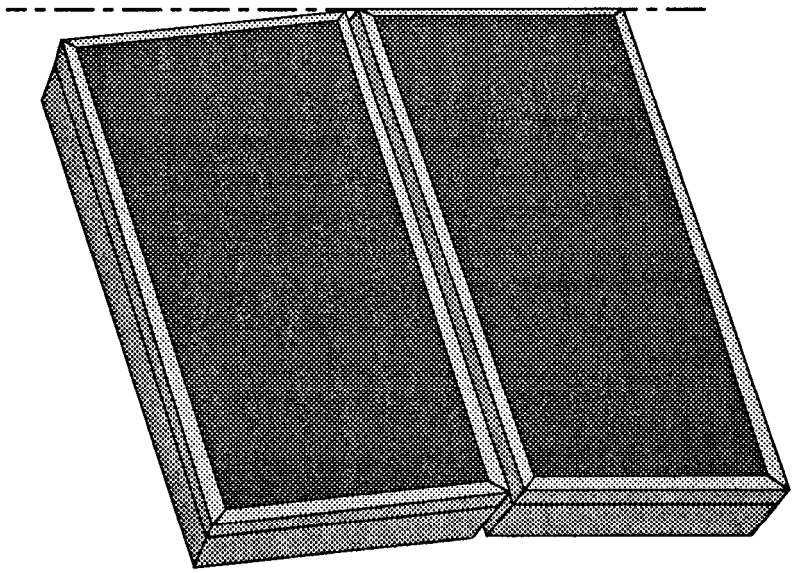

If any of the connections between the mounting hardware and the building are loose or missing, repair them. Examine the other mounting points to determine how to do this. Remember, the biggest load on these points is upward, as the wind tries to pick up the collectors.

If there is any corrosion, wire brush it off and repaint. If the corrosion is a result of two different metals being in contact (galvanic corrosion), isolate the two metals before repainting. Do this with gasket material or neoprene washers.

Use silicone seal, plastic roofing cement or pitch to reseal roof leaks. Your choice will depend on the type of roofing material and the roof/hardware connection. (Roofing cement is available in tubes for use in caulking guns.)

Lightning Protection

If lightning protection has been provided for the collector array, tighten any loose connections, and repair or replace missing, loose or fallen lightning rods.

Tighten connections at the ground rod(s), and make sure they are still secure and in good condition.

Make sure all collectors are under the “cone of protection” of the lightning rods, That is, within the perimeter of installed lightning rods.

Frame Ground

Every collector with a sensor must have its frame grounded. This ground helps prevent damage to the system control.

The typical grounding method is simple (Figure 6-5). A short piece of 12 or 14 gauge copper wire is stripped at each end about two inches. One end is hose clamped to an absorber plate header. The other end is connected to the collector frame. The frame connection usually involves the collector mounting hardware.

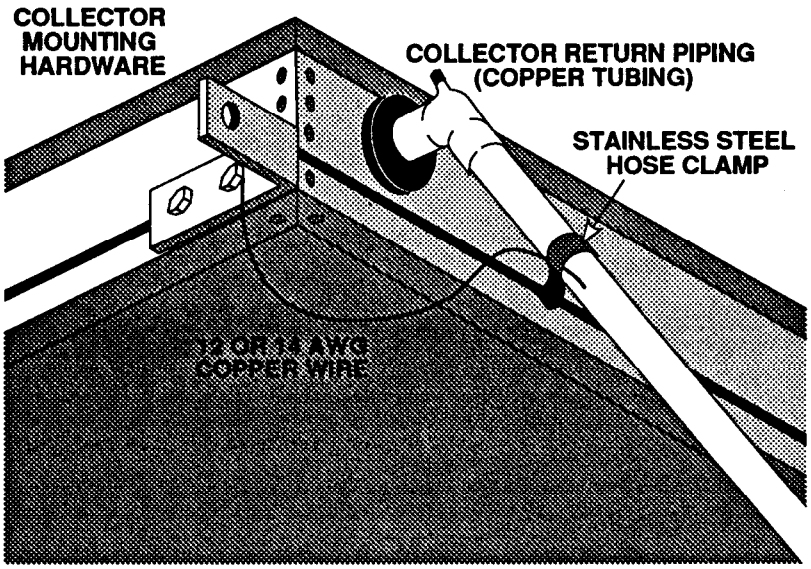


FIGURE 6-5
A Properly
Grounded Collector

After installing or reconnecting this ground, use an ohmmeter to make sure there is a solid electrical connection between the absorber piping and the frame. Cover the junction between the aluminum frame and the copper wire with silicone sealant to reduce galvanic corrosion.

At the mechanical room, use the ohmmeter to confirm that the collector loop piping is connected to ground. If it is not, hose clamp another section of copper wire to the collector return line. Run this over to a mechanical ground, usually the same one used for the building electrical system.

Remember that the surface of anodized or painted aluminum does not conduct electricity. Anodized aluminum may not appear to have any coating.

Collector Flow Rates Balanced

Measure the outlet temperatures of each collector group in the array.

These temperatures should all be within 5 degrees of each other. If not, rebalance the flow rates between collector arrays.

Balancing must be done on a sunny day when the system is operating. Open all balancing valves fully. Reduce the flow slightly through the array with the lowest outlet temperature. Wait three or four minutes, and recheck all the array outlet temperatures. Continue balancing and waiting until all the temperatures are within five degrees of each other.

NOTE

Close the balancing valves as little as possible. Reducing the flow rate through the collectors reduces their efficiency.

Sensor Wires and Sensors

Check sensor wires for UV degradation. They should be secure and make a watertight connection where they pass through the roof. They should not be near sharp edges, or within 1 foot of 120V and 2 feet of 240V wiring or loads.

Make sure the connection to the sensor is still electrically sound. If the connectors do not appear watertight, replace them.

Make new sensor connections by twisting the wires together, then twisting on small wire nuts. After installing the wire nuts, fill them with silicone sealant. Tie a knot in the wires for strain relief.

Unless they are defective, the actual sensors should require no maintenance. Each sensor must be within 1 inch of the collector housing, well insulated from the outside air, and protected from weather and mechanical stress.

Sensor testing is described in Section 3.1.7 and replacement is described in Section 5.2.7.

### 6.1.2 Interior and Exterior Piping,

Insulation

Repair or replace any loose or missing pipe insulation. Exterior runs must be covered with adequate insulation and a weatherproof jacket. This includes the short pipes between collector headers, and the unused (and capped) headers.

Elastomeric insulations (such as Armaflex™ or Rubatex™) do not require jackets, but repaint or cover them to protect them from the sun's UV radiation.

Fiber glass and rigid foam insulation must be jacketed. Section 2.7.8 has more information on pipe insulation and jacketing materials.

Interior piping must also be insulated, but jacketing or painting is only required for appearance, color coding, or protection from inhabitants.

Use materials and techniques similar to those used originally to repair piping insulation. Do not use duct or electrical tape to hold the insulation together. This method will fail in a few months, making the system look and perform worse than ever.

Hangers

Replace missing hangers, and tighten loose ones. Be sure galvanized hangers are not in direct contact with copper tubing. (The galvanic corrosion resulting from this will "eat" the solder out of the joints.) Provide adequate cradles for the pipe insulation to keep it from being crushed.

Leaks

Leaking soldered joints must be repaired with a high-temperature solder- not 50/50 (Tin/Lead)! 95/5 (Tin/Antimony) can be used on all copper-to-copper joints. Joints involving bronze should be repaired with 96/4 (Tin/Silver) solder. The use of 50/50 will result in joint failure within a few months, and is a violation of plumbing code.

WARNING!

Glycols and oils will burn when exposed to soldering torch flames. **Always drain the piping before unsoldering joints!** Before heating the joints, remove the air vent to allow fluid vapors to escape. As the joint comes apart, be prepared for a brief flare. Keep a fire extinguisher with you- not out in the truck!

Threaded joints in piping filled with glycols or synthetic oils must use teflon-based thread sealants. Teflon tape, or Rectorseal #100 are two good choices. The only appropriate sealant for threads exposed to silicone oils is fluorosilicone.

Brazed joints, and flared or compression fittings are all acceptable, but are rarely used because they are less convenient than soldered or threaded joints.

Be sure to completely reinsulate the repaired piping.

CAUTION

The common practice of hydrostatic pressure testing is not acceptable for systems filled with either synthetic or silicone oils. Never put water into piping used for oils.

Bypass and Balancing Valves

Compare the configuration of flow balancing and bypass valves against the system's Operations & Maintenance manual, or against tags or labels on valve handles.

If neither source of information exists, trace the piping to check valve positions. Use pumps and check valves for clues to flow directions. When flow direction is determined, tag the valves with this information or mark it on the insulation jacket for future reference.

Tempering Valves

Check for proper tempering valve operation by running hot water from a fixture until the temperature stabilizes and measuring the water temperature.

This can only be done when the outlet temperature of the tank preceding the valve is hotter than the valve setting.

Expansion Tanks

Check expansion tanks with diaphragms in closed loops by very briefly depressing the schrader valve stem. (Figure 6-6) If any fluid comes out, the diaphragm is leaking and the tank must be replaced.

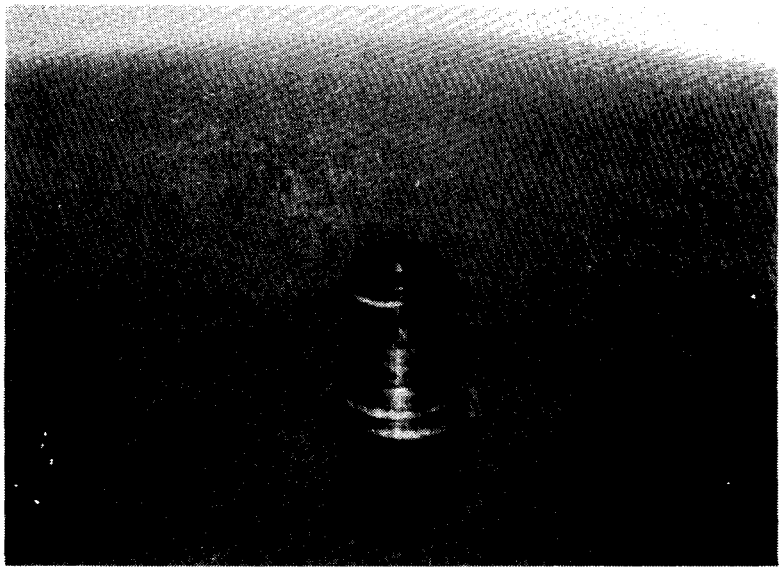

FIGURE 6-6
Schrader Valve on a
Diaphragm-Type
Expansion Tank

NOTE

Repeated testing of diaphragm-type expansion tanks as described above will eventually release enough air to interfere with proper operation. Whenever the fluid is removed from the loop, the air pressure of the tank should be measured and necessary air pumped in.

On tanks without diaphragms, check the sight glass to determine the fluid level. Depending on system pressure, about half the tank volume should be air, but you should at least be able to determine the fluid level.

### 6.1.3 Pumps,

Electrical Connections

Make sure all wiring, conduit and junction boxes are securely fastened. All wire connectors and cover screws should be in place and tight. Turn shutoff switches or breakers off and on to check them. Use an ohmmeter to confirm that the pump motors are properly grounded.

Piping Connections and Seals

Check all pump ports for signs of leakage or corrosion, both while the pump is running and when it is off. Look for leakage at the body seal on wet rotor pumps and the shaft seal of external motor pumps.

Remember that packing seals are designed to drip slowly. If the leakage is too high, compared to the manufacturer's recommendation, tighten the packing gland bolts one-half turn at a time so the tightening is uniform. Tighten until the leakage rate is appropriate.

If the pump has flanges, make sure the bolts are all in place and tighten any loose ones. If it has isolation flanges, make sure the shutoff valves close easily and check them for leakage.

Support

Tighten any loose pump supports. Any rust should be removed, and the supports repainted.

Flow Rate

Check the flow rate of all pumping loops using a direct-reading flow meter, a flow-setter and differential pressure gauge or pressure gauges on each side of the pump.

In general, the pressure change across the pump, while it is running, is converted from PSI to Feet of Water. The manufacturers published pump curve is checked to determine the flow rate at that pressure difference. These methods are reasonably, but not completely, accurate. They are described in detail in Section 3.1.4.

## Lubrication

The motors of wet rotor pumps never require lubrication. External motor pumps should be checked at every inspection. If there is no way to determine lubricant levels, a regular schedule for adding oil should be established, to avoid over-oiling the motor.

Add oil to sleeve bearings very slowly. When you see it coming from the overflow hole, or the indicator cup is full, enough has been added (Figure 6-7).

Ball bearings are greased, rather than oiled (Figure 6-7). The entire assembly of those that are permanently lubricated must be replaced when worn out.

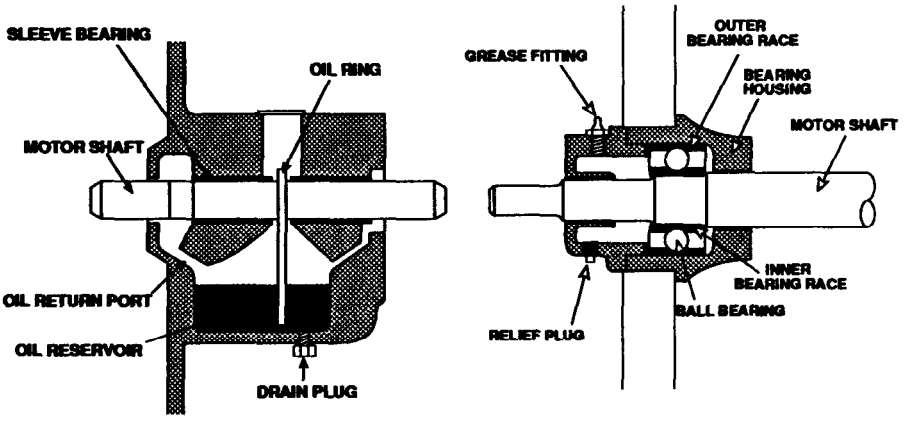


FIGURE 6-7
Sleeve Bearings Lubricated by Oil (left) and Ball Bearings Lubricated by Grease (right)

If grease can be added, remove the relief or drain plug, and add grease with a grease gun on the fill ("zerk") fitting. Keep filling until all the old, dirty grease has been pushed out the plug. The motor can be run during filling to make it easier, as long as the pump is not assembled and being run without liquid.

Do not attempt to add grease without removing the relief plug. Leaving the plug in will cause the bearings to be packed solidly. This may cause overheating and bearing failure.

Shafts and Bearings

External motor pumps should be checked for shaft alignment and bearing wear. If the shaft is out of alignment, bearings will wear quite rapidly. Listening to the pump is one of the best ways to check and correct alignment.

Current Draw

Another excellent way to spot pump problems is by measuring the current draw of the pump and comparing it to the manufacturer's specifications.

Table 3-l in Section 3.1.4 gives a general indication of the pump's condition based on current readings.

### 6.1.4 Heat Exchangers.

Piping Connections and Seals

Check all heat exchanger ports for signs of leakage or corrosion. Tighten loose bolts to stop leakage at the bonnets of shell and tube heat exchangers. If necessary, replace or repair the bonnet gasket. The fluid against this gasket should be water, so no special materials should be necessary.

Supports

Tighten up any loose connectors in heat exchanger supports. Clean off any corrosion, prepare the surface, and repaint.

Flow Rate

Methods of checking flow rates are described in Section 3.1.4. Compare it to the specifications in the system's O & M manual, or check them against the rules of thumb in Appendix B.

If potable water flow rates are significantly lower than the system specifications, scale may have built up on heat exchanger passages.

Some heat exchangers can be mechanically descaled with brushes. To do this, drain and open the heat exchanger. Run the brush through each tube several times. After brushing, flush the heat exchanger with plenty of water so small pieces of scale cannot get stuck in system components.

In many cases, the scale cannot be removed mechanically. The heat exchanger may not be built for it, or the scale deposits may be too hard or thick. In these cases, chemical descaling, using various types of acid is necessary. Information on this process is in Section 5.2.5.

**WARNING!**

If the water being heated is potable (used for drinking, cooking or bathing), the descaling solution should not be toxic! If this is not possible, be sure to completely flush the heat exchanger with fresh water after descaling.

Temperature Change

While the system is running, check the temperatures at the inlets and outlets of all heat exchangers. Make sure the temperatures change in the appropriate directions. The fluid entering the heat exchanger from the collectors should be higher in temperature than the fluid leaving the heat exchanger going back to the collectors. The water coming in from the storage tank should be cooler than the water going back to the tank.

Sacrificial Anodes

If the heat exchanger has a sacrificial anode in the tube manifold, check it by unthreading it, if it is accessible from outside the heat exchanger. If not, remove the bonnet to check it.

If the anode is gone, or nearly gone, a replacement should be obtained and installed.

If an exact replacement cannot be obtained, it may be possible to saw off a one or two inch chunk of water heater anode and place it inside the shell. Use a standard threaded plug to close up the port in the heat exchanger. Reinsulate the heat exchanger.

Draindown Tank/Heat Exchanger

Add distilled or deionized water until the fill port overflows when the solar loop pump is off.

Drainback systems are normally filled with distilled or deionized water.

### 6.1.5 Solar Fluids.

Water

If water quality is poor, water treatment equipment may be used. The product water from the treatment equipment should be checked.

Usually, water is “softened,” to remove scale-causing “hardness.” Typically, this is done with ion-exchange softening equipment. Test for hardness with any standard water hardness test equipment.

Sometimes iron is a problem. Standard ion-exchange softeners, specialized iron filters, or chlorine-based treatments are used to remove iron. These can all be easily checked with a test kit for total iron (both ferrous and ferric iron).

Glycols

Check for the recommended pressure from the system’s operation and maintenance manual. If no such manual exists, Section 5.2.6 includes **a** chart of recommended pressures.

Glycol-based fluids should be checked for glycol concentration and the condition of the corrosion inhibitor. If these two cannot be checked, at least check the pH (acidity/alkalinity) of the fluid.

To check glycol concentration, some manufacturers (including Dow Chemical Company) furnish simple test kits with simple test strips and color charts. Another method is an optical refractometer. Both these methods only require a few drops of fluid and are quite simple.

To check the condition of the corrosion inhibitor, measure either the pH or the reserve alkalinity of the fluid. Most glycol manufacturers recommend that the pH should not drop below 7.0 and the reserve alkalinity should not drop below 8.0. Should either condition be too low, the fluid must be replaced or reinhibited.

To check the pH, use pH paper or tape, or have a laboratory analyze the fluid. If using pH tape, use fairly fresh tape with a pH range from 6.0 to 8.0. Water treatment specialists or swimming pool chemical suppliers are good sources for pH tape. To check the reserve alkalinity, use a special test strip from the manufacturer, or have a lab check it.

If glycol-filled loops are equipped with automatic water make-up, close gate valves, if possible, and tag them so they will remain closed.

Synthetic and Silicone Oils

Oils do not require replacement or reinhibiting. However, the fluid pressure must be adequate.

Check for the recommended pressure from the system's operation and maintenance manual. if no such manual exists, Section 5.2.6 includes a chart of recommended pressures.

### 6.1.6 Controls.

Electrical Connections

Check all conduit and wiring connections. Make sure the system is mechanically grounded (to earth). Pay particular attention to the sensor wire connections. Make sure no small strands of wire from adjacent terminals touch each other. Such contact provides a direct short circuit which completely disrupts normal control operation.

Mounting

Be sure the control and associated conduit is securely mounted.

Control Operation

With all sensor wires disconnected and the control switch in the "automatic" position, jumper the two terminals marked "Collector" (or "COLL," etc.). The solar loop pump (and water loop pump, if used) should come on. (Figure 6-8)

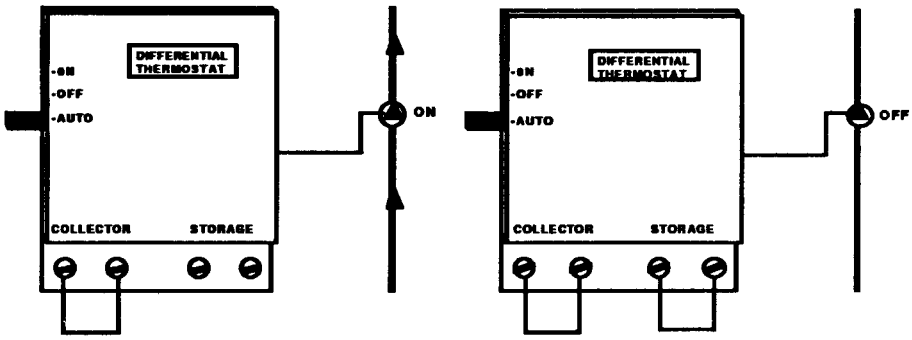


FIGURE 6-8
Checking On/Off Operation by the Jumper Method

With the collector sensor terminals shorted, jumper the sensor terminals marked “Storage” (or “STOR,” etc.). The pump(s) should go off. (Figure 6-8)

To test the high limit function, jumper the collector sensor terminals on the control. Once the system is running, hold the leads of an appropriate resistor against the storage sensor terminals. (Figure 6-9) The system should turn off, as the control is being told the storage tank is above the high limit temperature.

FIGURE 6-9
Checking High Limit Function with a Single Resistor

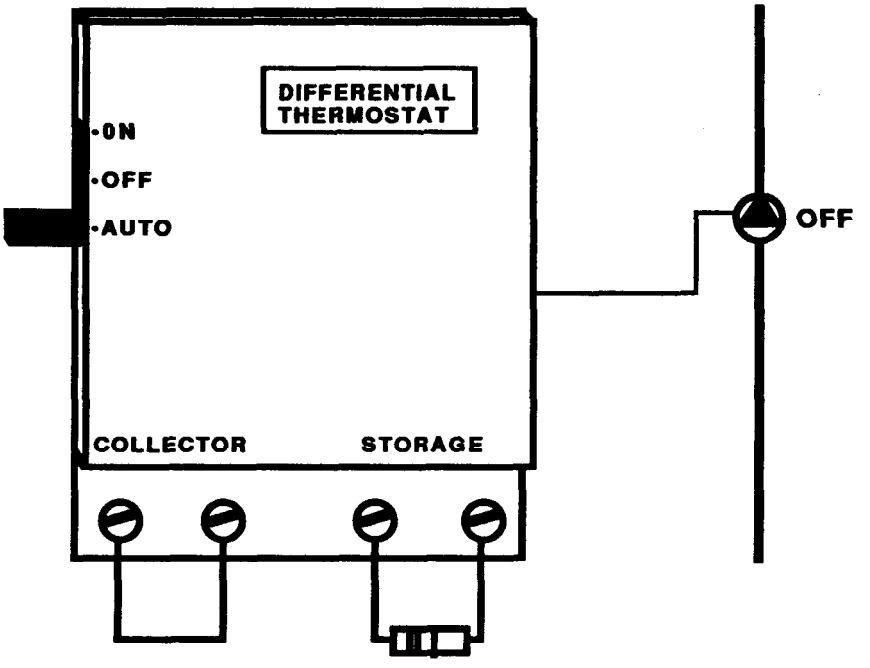


Use Table 3-3 or 3-4 to determine the right resistance to use to impersonate a particular temperature. An abbreviated version, with resistor color codes, is presented in Table 4-3.

Controls: Tester Method

A more accurate method of testing differential thermostats is with a special tester designed for that purpose. (Figure 6-10) Normally, these units have four leads or terminals. These are connected to the collector and storage sensor terminals of the control. The tester supplies a calibrated resistance to the two sensor inputs.

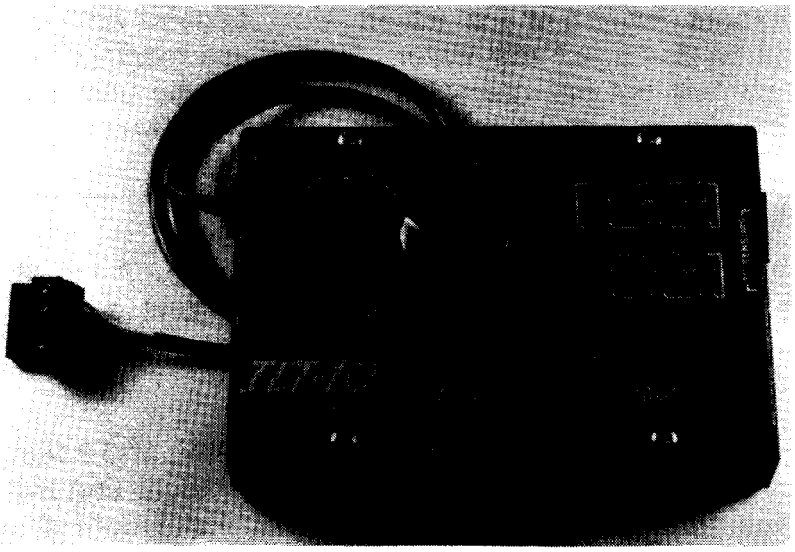

FIGURE 6-10
Solar Control
Tester

*Courtesy of Heliotrope General*

The dials on most testers are not very accurate. If the control has a digital display, use that instead of the numbers on the tester dial.

Sensors

To check suspicious sensors, disconnect the wires from their terminal at the control. Leave the connections intact at the sensor for the time being. Using an ohmmeter and Table 3-3 or 3-4, determine if the resistance of the sensor is appropriate for the temperature it should be measuring.

If the control has a digital display, leave the sensor wires connected and use the control display to check the sensors. If the displayed temperatures do not appear appropriate, disconnect the sensor wires from the control and use an ohmmeter as previously described.

Many digital displays indicate short or open circuits by flashing the digits on display. Again, an ohmmeter should be used on disconnected sensor wires.

Confirm also that the sensor resistance changes as the sensor temperature changes. This may require warming a cool sensor in your hand, or moving a sensor off a warm collector or tank into the cooler air.

> CAUTION
>
> Do not immerse sensors in warm or cold water. Most sensors are not waterproof and can be damaged with water. Resistance readings of an immersed sensor will not be correct. If water must be used to provide temperature extremes for testing, place sensor in a watertight plastic bag.

Remember, sensor resistance goes up as temperature goes down. A temperature increase results in a resistance decrease. If the ohmmeter shows a direct short (zero ohms), or an open circuit (infinite ohms), check the sensor wiring as well as the sensor itself.

Make sure sensor wiring is located at least 1 foot away from 120V, and 2 feet away from 240V wiring and motors. It is very easy for a tiny electrical current to be induced in the low voltage sensor wires. This current will make normal control operation impossible.

### 6.1.7 Storage Tanks.

Drain Valves

Check that the drain valve on the storage tank opens and closes properly without leaking. On DHW or process heating systems, rapidly drain one gallon for every ten gallons in the tank. For example, drain eight gallons from an 80 gallon tank.

Insulation

Tank insulation must be complete, dry and properly jacketed. If foam insulation has been applied to the exterior, make sure it is still in good condition.

If the tank is buried, take tank-top temperature readings one hour after the end of a solar collection day and again the next morning. During that night, bypass the tank, so any temperature loss is through the tank wall and insulation, not to a load. The overnight loss of heat on a properly insulated tank will typically result in a temperature loss of less than ten degrees Fahrenheit.

## Sacrificial Anode

Unscrew and inspect the sacrificial anode in steel tanks with glass linings. The pipe dope used by the manufacturer makes the rod difficult to remove the first time. After inspection, clean this dope off the threads and use teflon tape. This will make subsequent removal easier.

If only a few inches of anode rod are left, replace it. If the distance between the tank top and the ceiling prohibits installing a straight anode rod, use a sectioned rod. This looks like links of sausage, and eliminates having to disconnect the tank.

## Fittings and Piping

Check all fittings for leaks and evidence of corrosion. Insulation on piping must be complete. Insulation jacketing, if used, must be intact.

## Temperature and Pressure Relief Valves

Leaking or inoperative temperature and pressure (T & P) relief valves must be replaced immediately. The usual standard valve for tanks connected to city water pressure is 210°F/125 PSI.

**WARNING!**

Never, under any circumstances, use a pressure-only relief valve in place of a temperature and pressure relief valve.

## Heating Element

If the tank has a back-up electric element, be sure the sensor and back-up element wiring are separated by at least one foot.

## 6.2 Sample Maintenance Checklist

A maintenance checklist is shown next. It can be copied and used directly, or it can be retyped with modifications for particular systems.

If a particular maintenance operation is performed, place a check in the column before each operation. If that operation cannot be done, or is not necessary for a particular system, make an appropriate notation in the column.

We suggest using “N.A.” for operations not applicable to a system, and an asterisk, *, if it cannot be done. Put another asterisk in the “Notes” section with an explanation. Use the “Necessary Repairs” section near the end to describe required major repairs.

After the checklist is filled out, use it to pinpoint necessary maintenance or repairs. Then file it with all the other system inspection sheets, or with the operation and maintenance manual for that system.

Solar System Maintenance Checklist

Site/Location: _____ Date: _____

_____

Collectors

___ Glazings unbroken, clean (Do not clean when hot!)
___ Frames, seals and gaskets tight or resealed
___ Mounting hardware secure, corrosion cleaned and painted
___ Lightning protection, if used, is secure
___ Frame grounded to absorber piping
___ Flow rate balanced throughout array
___ Sensor and wires secure

Exterior Piping

___ Insulation complete, weatherproof, secure
___ Hangers supporting piping properly without stress
___ Leak check, none found, PRV's check out

Interior Piping

___ Insulation complete, secure
___ Leak check, none found, PRV's and T&P's check out
___ Valves in correct positions, open and close properly
___ Hangers supporting piping properly without stress

Pumps

___ Electrical connections secure
___ Leak check, none found
___ Flow rate in appropriate range
___ Adequate lubrication supplied (dry rotor pumps only)
___ Current draw is appropriate

For information on correct flow rate, temperature and pressure ranges, check the system's O & M manual, or this manual's Appendices for more information.

Heat Exchanger

___ Leak check, none found
___ Piping connections secure
___ Anode in water manifold checked, replaced if necessary
___ Temperature differences appropriate
___ Water level in drainback tank, if used, correct

Closed-Loop Fluid, if used

___ Adequate pressure
___ Glycol pH, alkalinity and concentration acceptable
___ Automatic water make-up, if present, is shut off and tagged

Control

___ Electrical connections secure
___ Control and conduit securely mounted
___ On/off differentials checked
___ High limit function checked
___ Sensor resistance checked
___ Sensor wires checked
___ Sensor wires routed correctly

Storage Tanks

___ Drain valve opens and closes properly
___ 10% of water drained out of tank (DHW or process heating)
___ Leak check, none found
___ T & P installed, working
___ Sensor and wiring secure
___ Heating element thermostat, if used, checked

For information on correct flow rate, temperature and pressure ranges, check the system's O & M manual, or this manual's Appendices for more information.

Paperwork

___ O & M manual for system on site or available
___ Flow Diagram and Control Sequence of Operations on site or available (see Inspection Checklist)
___ Service record for system on site or available
___ This maintenance record filed in service record

Notes:

Necessary Repairs

Performed by: _____

Approved by: _____

## 6.3 Questions for Self-study

Instructions: Choose the one answer you believe is correct. Answers to questions are in Appendix F.

6-1 Glazing are breaking repeatedly on one collector of an array. What is the most likely cause?

a) Defective glass
b) Vandalism
c) Incorrect collector tilt angle
d) Out of square collector frame

6-2 Which direction are collectors most likely to be forced by wind?

a) Down
b) UP
c) North
d) South

6-3 What is the first step in collector array flow balancing?

a) Reduce the flow slightly through the bank with the lowest outlet temperature
b) Reduce the flow slightly through the bank with the highest outlet temperature
c) Open all the balancing valves all the way
d) Close all the balancing valves all the way

6-4 What is the best way to connect sensor wires together?

a) Twist the wires together, fill the wire nut with silicone and twist the wire nut on the wires
b) Twist the wires together, twist the wire nut on the wires and fill the wire nut with silicone
c) Solder the wires together and cover with tape
d) Use wire nuts and cover with tape

6-5 Which of these must be done to fiber glass insulation used outside?

a) Painting
b) Jacketing and painting
c) Jacketing
d) Nothing

6-6 Which of these piping materials can be used in a collector loop filled with silicone oil?

a) Standard pipe dope
b) Teflon tape
c) 50/50 solder
d) Fluorosilicone

6-7 Which of these can be used in a closed-loop system's collector loop?

a) Temperature and pressure relief valve
b) Draindown solar control valve
c) Vacuum breaker
d) Pressure relief valve

6-8 What is the correct maintenance for sleeve bearings on pumps?

a) No oil is required
b) Oil every two to five years
c) Oil once or twice a year
d) Oil as often as possible

6-9 Which fluid will require a sacrificial anode in the heat exchanger bonnet?

a) Silicone oil
b) Ethylene glycol
c) Tap water
d) Propylene glycol

6-10 Which of the following fluids is the most toxic?

a) Deionized water
b) Ethylene glycol
c) Synthetic oil
d) Propylene glycol

6-11 What does pH indicate?

a) Acidity
b) Concentration
c) Temperature
d) Pressure

6-12 What is needed yearly to maintain synthetic oil?

a) Replacement
b) pH adjustment
c) Rebuffering
d) Nothing

6-13 What are typical on/off differentials in degrees F for solar controls?

a) 5/20
b) 20/5
c) 1/5
d) 1/20

6-14 Why is water periodically drained from a solar storage tank?

a) To check the back-up heating thermostat
b) To check the thermistor sensor
c) To remove fallen sediment
d) To remove scale from the tank walls

# BIBLIOGRAPHY


Diamond, S.C., Avery, J.G and Wood, C., *Active Solar Energy System Design, Installation and Maintenance Manual,* DEB-TR-86-01, Tyndall Air Force Base, FL, Air Force Engineering and Services Center, April, 1986

Dow Chemical USA, *Engineering and Operating Guide for Dowfrost and Dowtherm* SR-1 *Heat Transfer Fluids,* 180-1190-85, Midland, Ml.

Durlak, Edward R., *Preventative Maintenance: Solar Energy Thermal Systems,* Techdata Sheet 84-14, Port Hueneme, CA, Naval Civil Engineering Laboratory, August, 1984.

Durlak, Edward R., *Solar Energy Thermal Systems,* Techdata Sheet 84-12, Port Hueneme, CA, Naval Civil Engineering Laboratory, August, 1984.

Goodrich, E.W., and Carr, J.B., "Guidelines for Reliable Sensing," *Solar Engineering,* May, 1981.

Grumman Energy Systems, *Installation and Maintenance Instructions for Model 60FS and Model 60FST,* SDMAN-3, Ronkonkoma, NY, August, 1978.

ITT Bell and Gossett, *Booster Pump Service Manual,* HA-105-SM, Rev. 2, Morton *Grove, IL,* May, 1969.

Kirby, James and Mirvis, Kenneth, *Solar Energy: An Installer's Guide to Domestic* Hot *Water,* National Association of Solar Contractors, 1982.

Meeker, John, and Boyd, Lew, "The Great, The Good, and The Unacceptable," *Solar Age,* Vol. 6, No. 10, October, 1981.

Revere Solar and Architectural Products, Inc., *Revere Sun-Pride System Installation Manual,* RSAP 5, Rome, NY.
Solar industries, *Installation and Operation Manual,* Farmingdale, NJ.

Solar Thermal Systems, *Daystar Solar Domestic Hot Water Systems Installation,* Burlington, MA, July, 1979.

SolarVision Publications, Inc., *Energy Products Specification Guide,* Harrisville, NH, 1984.

Tavino, Ralph R., *Novan Energy Dealer Manual,* Boulder, CO, 1982.

# APPENDIX A

## Standardized System Designs

The following systems are based on the ongoing efforts by military and civilian authorities to standardize the layout of solar systems. Hopefully, this will make the operation and maintenance of systems installed in the future easier.

These standardized system diagrams are not meant to be used as a plan to rehabilitate incorrectly designed systems. They are meant to help you determine when performance problems are actually caused by design errors.

These diagrams draw heavily on the Active Solar Energy System Design, Installation and Maintenance Manual prepared by Los Alamos National Laboratory for the Air Force Engineering and Services Center.

FIGURE A-1 Closed-loop System

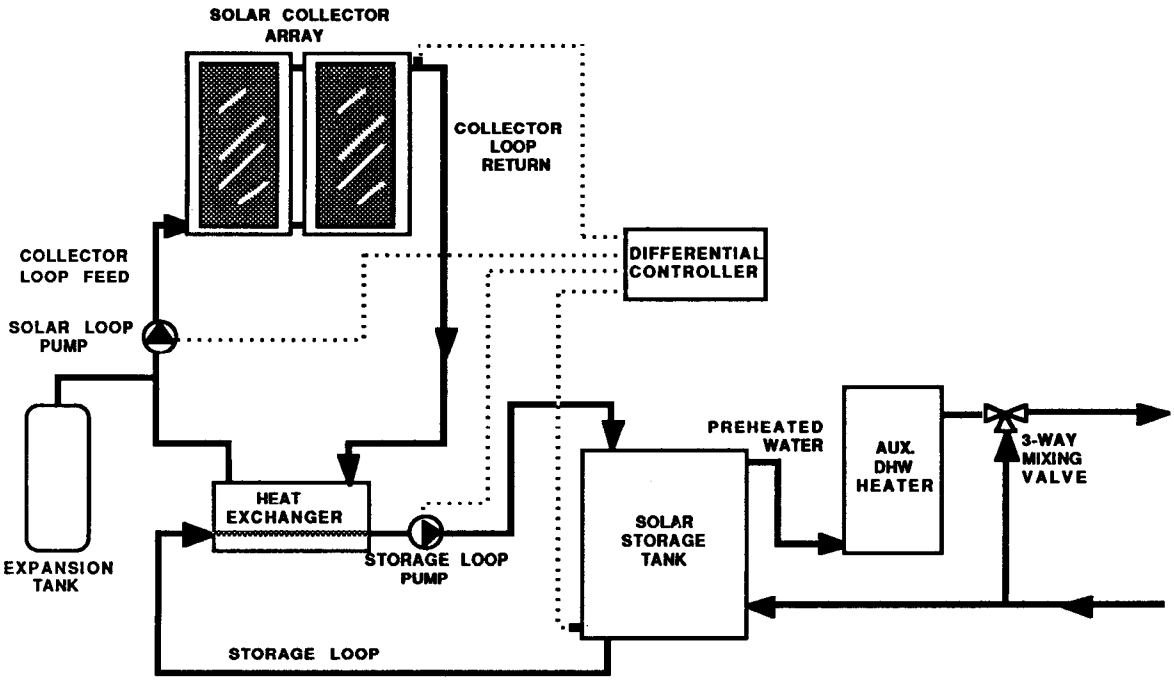


FIGURE A-2 Drainback System

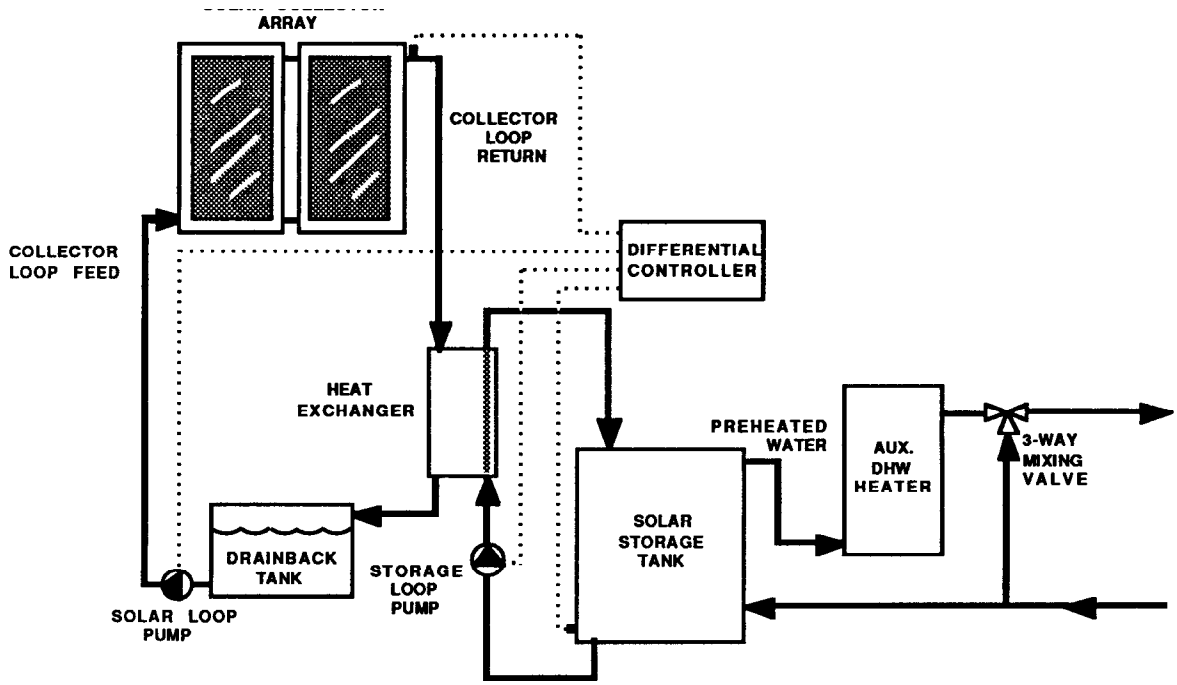

FIGURE A-3: Draindown System

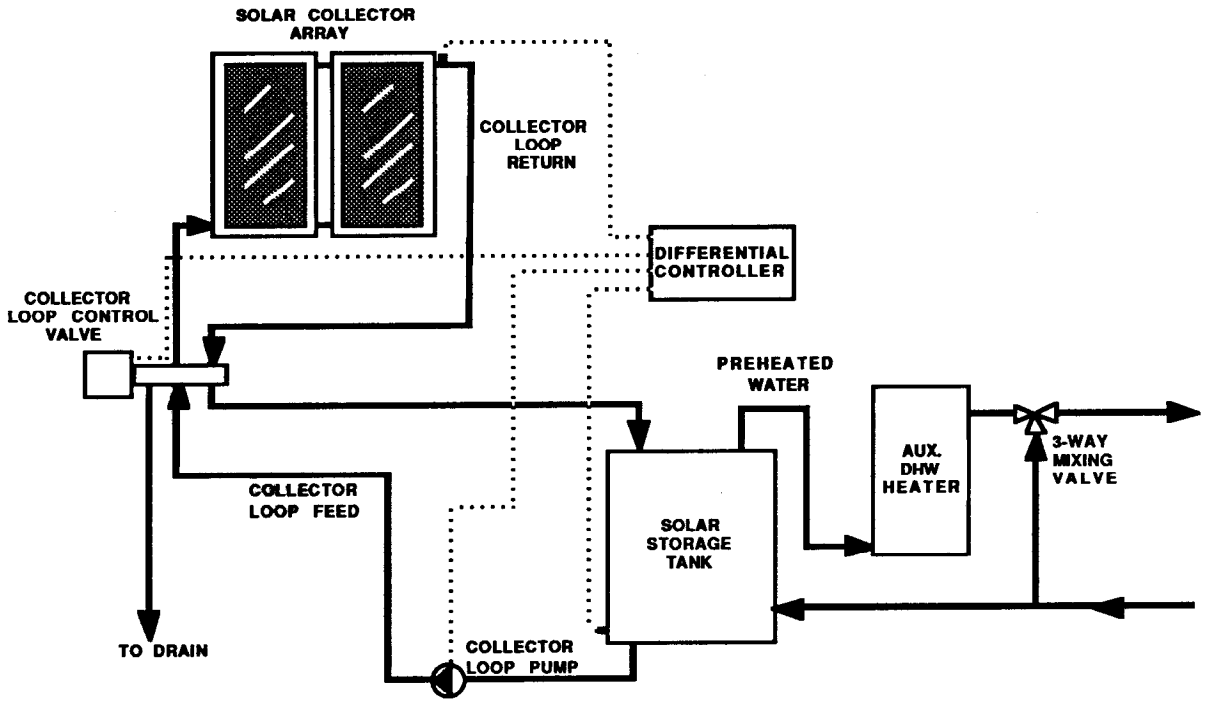


FIGURE A-4: Direct Pool System

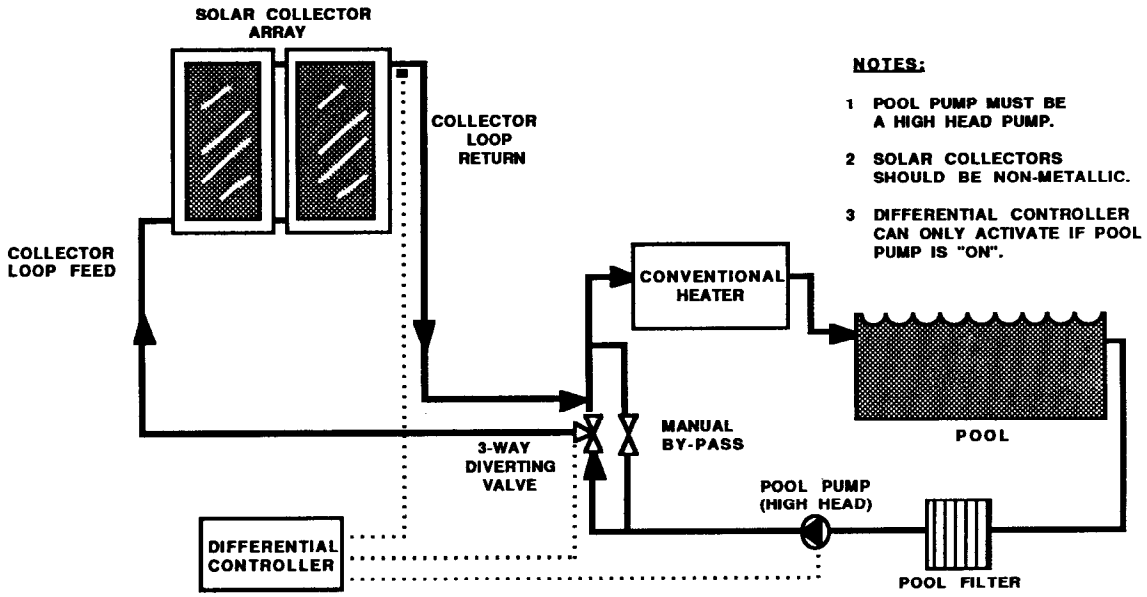

FIGURE A-5: Absorption Cooling System

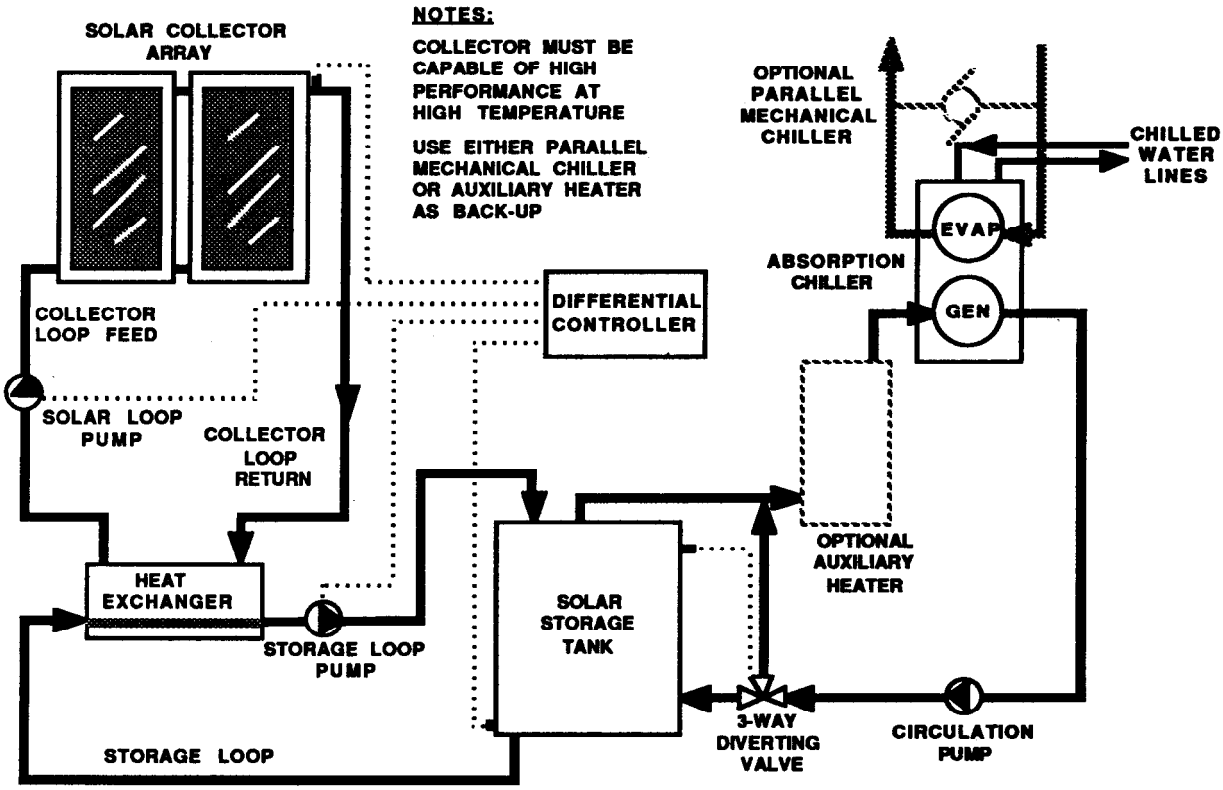

# APPENDIX B

## Rules of Thumb for Solar Systems

Introduction

The rules of thumb in this appendix are not intended to replace proper design procedures. They are included to allow you to determine if an existing system is operating within generally accepted ranges.

If the manufacturer's design recommendations are available, use them, instead of these rules of thumb.

Flow Rates

All flow rates for collectors are in gallons per minute per gross (overall) square foot of collector (GPM/sq ft). N.A. is used when that type of fluid is not used with that system component.

NOTE

If a system appears to be outside of the recommended ranges, and corrective actions on the system do not bring them back into the range, get design assistance from personnel on-base or in your Engineering Field Division (E.F.D.).

TABLE B-1 : Suggested Flow Rates for Solar Applications

| System Component | Fluid Type | | |
|---|---|---|---|
| | Water<br>Gpm/sq ft of Collector | 50/50 Glycol<br>Gpm/sq ft of Collector | Oils<br>Gpm/sq ft of Collector |
| Glazed Flat-Plate Collectors | 0.025 to 0.030 | 0.025 to 0.030 | 0.050 to 0.060 |
| Evacuated Tube Collectors | 0.012 to 0.014 | 0.012 to 0.014 | N.A. |
| Unglazed Pool Collectors | 0.050 to 0.250 | N.A. | N.A. |
| Closed Loop System Storage Water Loop | 1.25 to 2.0 times that of collector loop | N.A. | N.A. |
| Draindown System Storage Water Loop | 1.25 to 2.0 times that of collector loop | N.A. | N.A. |

Pipe Sizes

Solar system piping should be sized to supply an adequate flow without unnecessarily large pumps. This normally means larger sizes. However, in closed loops, the piping should be sized to provide a velocity of at least 1.5 ft/sec. to aid in air elimination, but not more than 4.0 ft/sec to avoid erosion corrosion of copper tubing and fitting walls.

The following table lists appropriate flow rate ranges for various sizes of copper tubing.

TABLE B-2: Flow Rates for Various Copper Tubing Sizes

| Tubing Size, Nominal (inches) | Flow Rates (gpm) | |
|---|---|---|
| | Minimum | Maximum |
| 1/2" | 1.5 | 3.5 |
| 3/4" | 2.5 | 6.5 |
| 1" | 4.0 | 10.0 |
| 1 1/4" | 7.0 | 18.5 |
| 1 1/2" | 9.5 | 25.0 |
| 2" | 15.0 | 42.0 |

Storage Volume

Generally, storage volume is based only on collector area, and should be between 1.5 and 2.5 gallons per square foot of gross collector area.

Systems with a load which overwhelms the solar system should have storage volumes at the lower end of the range. Systems which collect more heat than the load can use per day should have storage volumes in the upper end of the range.

Collector Tilt

Collectors should be tilted from the horizontal (not from a pitched roof!) according to the table below. The tilt should be within 10 degrees of the listed angle. For example, a spaceheating system at a latitude of 35º, which should have a tilt of 50°, can have a tilt angle of 40º to 60º without a noticeable decrease in annual performance.

TABLE B-3: Solar Collector Tilt Angles

| Application | Tilt Angle |
|---|---|
| DHW | Latitude |
| Space Heating | Latitude + 15º |
| DHW + Space Heating | Latitude + 10º |
| Space Cooling | Latitude - 15º |
| DHW + Space Cooling | Latitude - 15º |
| Process Heating | Latitude |
| Pool Heating, summer | Latitude - 15º |
| Pool Heating, all year | Latitude |

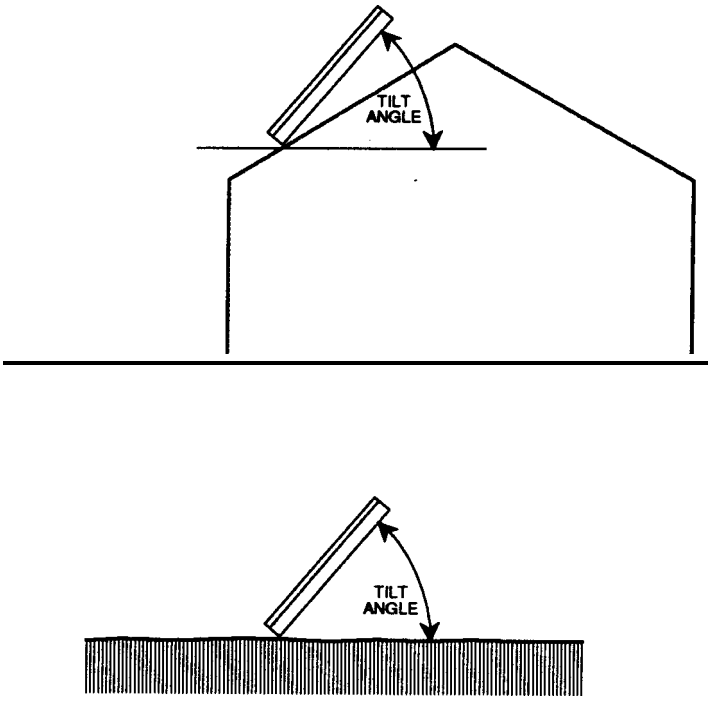


FIGURE B-1
Collector Tilt Measured from the Horizontal on Tilted and Level Surfaces

## Collector Orientation

For proper operation, the collectors must be oriented as close as possible to true south. In most areas, this varies from the magnetic south given by a compass. A simple correction must be made.

First, find the magnetic variation from an isogonic map. This is given in degrees east or west from magnetic south. Use the map below if the site is in the continental United States. Otherwise, a local map will show the magnetic variation.

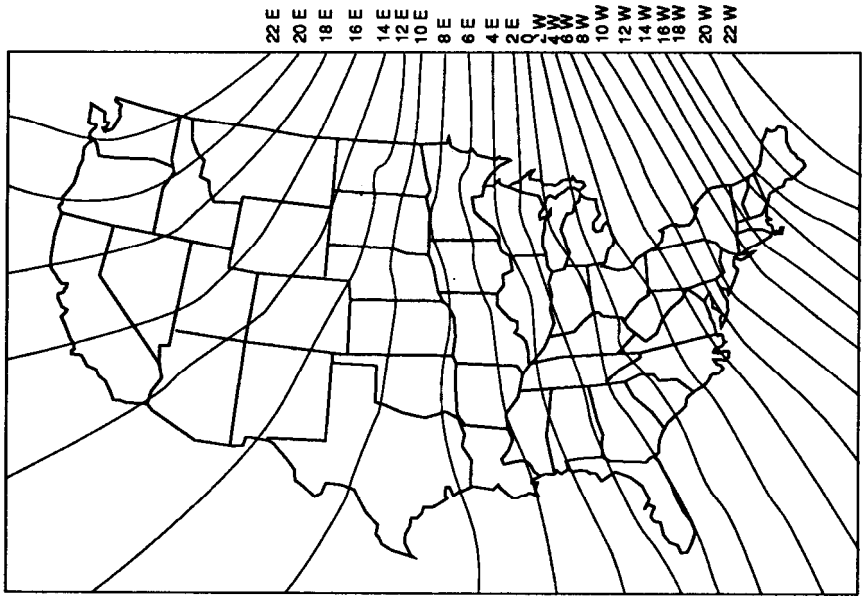


FIGURE B-2
Isogonic Map of the United States

For example, a site in Montana has a magnetic variation of 20 degrees east. This means that true south is 20 degrees east of magnetic south. On a compass oriented so the north needle is at 360 degrees, true south is in the direction indicated by 160 degrees.

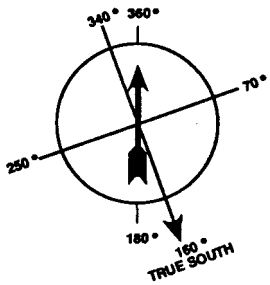


FIGURE B-3
Magnetic Variation on a Compass

FIGURE B-3
Collector Orientation

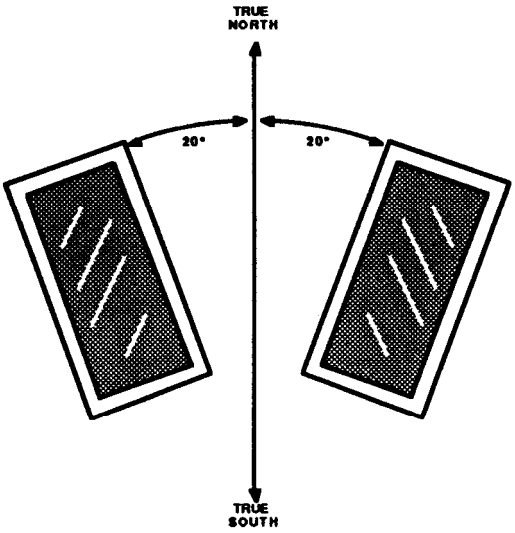


The collectors should be installed within 20 degrees of a true south orientation. Generally, errors toward the west are preferable to errors toward the east.

If the collectors cannot be oriented within this range, performance will be significantly affected.

# APPENDIX C

## Tool, Material and Spare Parts Lists

Tool and Material Lists

These lists include information on the need for specific tools and materials in different types of operations. Not all systems or operations will require every listed item or material, but these lists provide a starting point.

TABLE C-1 : Recommended Tool List

| Tool | Needed for: | | | |
|---|---|---|---|---|
| | Inspection | Troubleshooting | Repair | Maintenance |
| Tool Pouches | | X | X | X |
| Carpenter's Hammer | | | X | X |
| Tape Measure | X | X | X | X |
| Compass | X | X | | |
| Inclinometer | X | X | X | |
| Utility Knife | | X | X | X |
| Screwdrivers, | | | | |
| Phillips | X | X | X | X |
| Slotted | X | X | X | X |
| Wrenches, | | | | |
| Adjustable | | X | X | X |
| Open/Box | | X | x | X |
| Pipe | | X | X | |
| Socket | | X | X | X |
| Allen | | X | X | X |
| Caulking Gun | | | X | X |
| Torpedo Level | X | X | X | X |
| Hacksaw | | | X | |
| Wire Strippers | | X | X | |
| Needlenose Pliers | | X | X | |
| Gloves | | | X | X |
| Fire Extinguisher | | | X | |
| Paint Brush | | | X | X |
| Electric Drill | | | X | X |
| Reciprocating Saw | | | X | |
| Multimeter | X | X | X | X |
| Snap-Around | | | | |
| Ammeter | X | X | X | X |
| Control Tester | | | | |
| or Resistors | X | X | X | X |
| Mitre Box | | | X | X |
| Hand Truck | | | X | |
| Drop Light | X | X | X | X |
| Channelock Pliers | | | X | |
| Vise Grips | | | X | |
| 24' Extension Ladder | X | X | X | X |
| or Stepladder | X | X | X | X |

TABLE C-1 (continued)

| Tool | Needed for: | | | |
|---|---|---|---|---|
| | Inspection | Troubleshooting | Repair | Maintenance |
| 100' Extension Cord | X | X | X | X |
| Charging Pump, with Hoses and Bucket | | | X | X |
| Soldering Torch, with Tools | | | X | |
| Broom | | X | X | X |
| Compressor or Air Bottle | | X | X | X |
| Safety Glasses | X | X | X | X |
| Tin Snips | | | X | X |
| Staple Gun | | | X | X |
| Flashlight | X | X | X | X |
| First Aid Kit | X | X | X | X |
| 100' 1/2" Manila Rope | | | X | |
| Rubber-soled Shoes | X | X | X | X |
| Wire Brush | | | | X |

TABLE C-2: Recommended Material List

| Material | Needed for: | | | |
|---|---|---|---|---|
| | Inspection | Troubleshooting | Repair | Maintenance |
| Rags | | X | X | X |
| Solder, 95/5 or 96/4 | | | X | |
| Flux | | | X | |
| Gritcloth | | | X | |
| Thread Sealant | | | X | |
| Copper Tubing | | | X | |
| Copper Fittings | | | X | |
| Silicone Sealant or Roof Cement | | | X | X |
| Cable Ties | | X | X | X |
| Wire Nuts | | X | X | X |
| Electrical Tape | | X | X | X |

TABLE C-2 (continued)

| Material | Needed for: | | | |
|---|---|---|---|---|
| | Inspection | Troubleshooting | Repair | Maintenance |
| Solar Fluid | | | X | X |
| Distilled Water | | | X | X |
| Pipe Insulation | | X | X | X |
| Insulation Jacket or Paint | | | X | X |
| Liquid Soap or Leak Detect | | X | X | X |
| Pipe Hangers and Saddles | | | X | X |
| Various Fasteners | | | X | X |
| 1' 12 AWG Copper Wire | | | X | X |
| Glass Cleaner | | | X | X |

Spare Parts List

The exact number of spare parts depends on the number, size and types of systems. Experience has shown a range of inventory levels appropriate for each component. The following percentages are based on the total number of that component on base, not the number of systems.

An asterisk indicates that at least one of that component should be in stock at all times, regardless of the number of systems or components in service, as long as that component is used on at least one system.

The minimum quantity of solar fluid is the amount required to refill the largest system.

TABLE C-3: Recommended Spare Parts List

| **Component** | **Percentage Range** |
|---|---|
| Collector Glazings, with Gaskets* | 0.3% - 5.0% |
| Complete Collectors, or Absorbers* | 1.0% - 3.0% |
| Collector Sensors* | 2.5% - 10.0% |
| Storage Sensors* | 2.5% - 5.0% |
| Differential Thermostats* | 2.5% - 5.0% |
| Wet Rotor Pumps (or Cartridges) | 1.5% - 5.0% |
| Solar Loop Dry Rotor Pumps | 1.5% - 3.0% |
| Storage Loop Dry Rotor Pumps | 1.0% - 3.0% |
| Tempering Valves* | 0.5% - 2.0% |
| Pressure Relief Valves* | 0.5% - 2.0% |
| Pressure and Temperature Relief Valves* | 1.0% - 3.0% |
| Check Valves* | 2.0% - 5.0% |
| Heat Exchangers | 2.5% - 4.0% |
| Expansion Tanks* | 1.5% - 4.0% |
| Draindown Control Valves* | 5.0% - 25.0% |
| Gallons of Solar Fluid* | 5.0% - 10.0% |

# APPENDIX D

## Product and Supplier Information

Most of the companies listed sell their products through manufacturer's representatives, distributors or both. Contact the manufacturer to find your local supplier. These may not be the only sources of supply, but if the original source of supply is unavailable, and local suppliers do not carry the appropriate materials, the companies listed below will be able to help.

### Pumps

Goulds Pumps, Inc.
Seneca Falls, NY 13148
(315)-568-2811
Jet pumps

Grundfos Pumps Corporation
2555 Clovis Ave.
Clovis, CA 93613
(209)-299-9741
Wet rotor, stainless steel or cast iron

ITT Bell and Gossett
8200 N. Austin
Morton Grove, IL 60053
(312)-667-4030
Dry rotor, cast iron or bronze,
(also heat exchangers)

Little Giant Pump Co.
3810 N. Tulsa
Oklahoma City, OK 73112
(405)-947-2511
Magnetic drive circulators and acid pumps

Myson, Inc.
P.O. Box 5025
Embrey Industrial Park
Falmouth, VA 22401
(703)-371-4331
Wet rotor, bronze

Taco, Inc.
1160 Cranston St.
Cranston, RI 02920
(401)-942-8000
Wet rotor, cast iron or bronze
(also heat exchangers)

### Piping Accessories

Amtrol, Inc.
1400 Division Road
W. Warwick, RI 02893
(401)-884-6300
Air vents, expansion tanks, air scoops, valves, etc.

SISCO
P.O. Box 197
Riverton, NJ 08077
(609)-829-8686
Pressure/temperature test plugs

Sunspool Corporation
439 Tasso Street
Palo Alto, CA 94301
(415)-324-2022
Draindown control valves

Watts Regulator Co.
10 Embankment St.
Lawrence, MA 01842
(617)-688-1 811
Valves, vents, etc.

**Controls and Sensors**

Heliotrope General
3733 Kenora Drive
Spring Valley, CA 92077
(619)-460-3930
Differential thermostats, sensors, remote temperature indicators, electronic aquastat/thermostats, control testers

Independent Energy
P.O. Box 860
42 Ladd St.
East Greenwich, RI 02818
(800)-343-0826
(401)-884-6990
Differential thermostats, sensors, remote temperature indicators, electronic aquastat/thermostats, control testers

Pyramid Controls
421-16 N. Buchanan Circle
Pacheco, CA 94553
(415)-827-0160
Differential thermostats, sensors, remote temperature indicators, control testers

Rho Sigma, Subsidiary of WATSCO
1800 West 4th Ave.
Hialeah, FL 33010
(305)-885-1911
Differential thermostats, sensors, BTU meters, control testers

**Heat Exchangers**

See Taco and ITT Bell and Gosset in pumps section

Young Radiator Company
2825 Four Mile Road
Racine, WI 53404
(414)-639-1011
Shell and tube heat exchangers

**Storage Tanks**

A.O. Smith Corp.
P.O. Box 28
Kankakee, IL 60901
(815)-933-8241
Glass lined, 66 to 120 gallons, up to 100 gallons

Bradford-White Co.
24th & Ellsworth St.
Philadelphia, PA 19146
(215)-735-6250
Glass lined, 65 to 120 gallons

Ford Products Corp.
Ford Products Road
Valley Cottage, NY 10989
(914)-358-8282
Stone lined, 40 to 120 gallons, coil in tank available

Mor-Flo Industries, Inc.
18450 S. Miles Rd.
Cleveland, OH 44128
(216)-663-7300
Glass lined, 52 to 120 gallons

Vaughn Corp.
386 Elm St.
Salisbury, MA 01950
(617)-462-6683
Stone lined, 66 to 120 gallons, coil in tank available

**Solar Glazings**

Rocky Mountain Solar Glass
7123 Arapaho Ave.
Boulder, CO 80301
(303)-442-4277

**Pipe and Collector Insulations**

Armstrong Cork Co.
PO. Box 3001
Lancaster, PA 17604
(717)-397-0611
Elastomeric and closed-cell pipe insulation

Celotex Corp.
P.O. Box 22602
Tampa, FL 33622
Foil-faced polyisocyanurate foam

CertainTeed Corp.
P.O. Box 860
Valley Forge, PA 19482
Fiber glass pipe insulation

**Solar Fluids**

Dow Chemical Company
Specialty Chemicals Dept.
Midland, Ml 48674
(800)-258-2436
Inhibited ethylene and propylene glycols

Dow Corning
South Saginaw Rd., Dept. 2314
Midland, Ml 48640
(517)-496-5985
Silicone oil

Novan Energy, Inc.
1630 N. 63d St.
Boulder CO 80301
(3030-447-9193
Inhibited propylene glycol, Brayco™ synthetic oil, and small quantities of other solar components

# APPENDIX E

**Fluids and Materials Compatibility**

| | City Water | Loop* Water | Propylene Glycol | Ethylene Glycol | Synthetic Oils | Silicone Oils |
|---|---|---|---|---|---|---|
| Butyl Rubber | Yes | Yes | No | No | No | No |
| Bronze/Brass | Yes | Yes | Yes | Yes | Yes | Yes |
| Cast Iron | No | Yes | Yes | Yes | Yes | Yes |
| Copper | Yes | Yes | Yes | Yes | Yes | Yes |
| EPDM | Yes | Yes | Yes | Yes | No | No |
| Fluorosilicone | Yes | Yes | Yes | Yes | Yes | Yes |
| Galvanized | No | Yes | No | No | Yes | Yes |
| Hydrin | Yes | Yes | Yes | Yes | Yes | Yes |
| Pipe Dope** | Yes | Yes | No | No | No | No |
| Polypropylene | Yes | Yes | No | No | No | No |
| Steel | No | Yes | Yes | Yes | Yes | Yes |
| Stainless Steel | Yes | Yes | Yes | Yes | Yes | Yes |
| Teflon | Yes | Yes | Yes | Yes | Yes | No |
| Viton | Yes | Yes | Yes | Yes | Yes | Yes |

* This is water trapped in a loop, replenished only occasionally with fresh water.
** This is standard pipe dope, not teflon-based.

# APPENDIX F

## Answers to Questions for Self-study

### Chapter 2

| | |
|---|---|
| 2-1 | d |
| 2-2 | c |
| 2-3 | a |
| 2-4 | c |
| 2-5 | b |
| 2-6 | b |
| 2-7 | b |
| 2-8 | c |
| 2-9 | b |
| 2-10 | c |
| 2-11 | a |
| 2-12 | b |
| 2-13 | d |

### Chapter 4

| | |
|---|---|
| 4-1 | b |
| 4-2 | c |
| 4-3 | c |
| 4-4 | a |
| 4-5 | c |
| 4-6 | c |
| 4-7 | d |
| 4-8 | b |
| 4-9 | c |
| 4-10 | b |
| 4-11 | a |
| 4-12 | d |
| 4-13 | a |
| 4-14 | c |
| 4-15 | b |
| 4-16 | a |

### Chapter 6

| | |
|---|---|
| 6-1 | d |
| 6-2 | b |
| 6-3 | a |
| 6-4 | b |
| 6-5 | c |
| 6-6 | d |
| 6-7 | d |
| 6-8 | c |
| 6-9 | c |
| 6-10 | b |
| 6-11 | a |
| 6-12 | d |
| 6-13 | b |
| 6-14 | c |

### Chapter 3

| | |
|---|---|
| 3-1 | c |
| 3-2 | c |
| 3-3 | b |
| 3-4 | a |
| 3-5 | c |
| 3-6 | c |
| 3-7 | b |
| 3-8 | b |
| 3-9 | a |
| 3-10 | a |
| 3-11 | b |
| 3-12 | c |
| 3-13 | c |
| 3-14 | a |
| 3-15 | a |

### Chapter 5

| | |
|---|---|
| 5-1 | b |
| 5-2 | c |
| 5-3 | a |
| 5-4 | c |
| 5-5 | d |
| 5-6 | a |
| 5-7 | b |
| 5-8 | b |
| 5-9 | d |
| 5-10 | b |
| 5-11 | c |
| 5-12 | c |
| 5-13 | d |
| 5-14 | a |
| 5-15 | b |
| 5-16 | a |

### Chapter 5 (continued)

| | |
|---|---|
| 5-17 | b |
| 5-18 | d |
| 5-19 | d |
| 5-20 | b |
| 5-21 | d |
| 5-22 | d |

# INDEX


Absorber plates, in collectors,
Operation, 7, 13, 20-23, 40
Inspection, 62, 63, 66, 69, 70, 95
Troubleshooting, 108, 125
Repair, 138, 142, 144, 146, 147, 149, 150, 152, 153
Maintenance, 203, 204, 207, 208, 223
Suppliers, D-3
Absorption chillers, 11, 12, A-4
Alignment, pump shafts, 23, 80, 111, 123, 214
Aluminum, 26, 64, 144, 152, 153, 187, 202, 204, 207
American Solar King, 150
Amperage, 123, 124,170
Amtrol, 186, 246
Anodes, *see Sacrificial anodes*
Antimony, 26, 129, 156, 209
Aquastats, D-2
Armaflex, 48, 71, 154, 209
Armstrong; D-3
ASME, 30

Barber Coleman, 86
Bearings, pump shaft
Inspection 80
Troubleshooting, 111, 123, 124
Repair, 139, 164, 165, 168
Maintenance, 213, 214
Bell and Gossett, *see ITT Bell and Gossett*
Bradford-White, D-2
Brass, E-1
Brazing, 150-151, 156, 174, 210
Bronze, E-1
Butyl, E-1

Capacitors of pumps, 139
Capacity of system components, 185
Cartridges, of pumps, 139, 164, 170, C-5
Cast iron, E-1
Caulking, 147, 206, C-2
Cavitation, of pumps, 38, 74, 161
Celotex, D-3
CertainTeed, 48, D-3
Charging closed loops, 37, 176-187, c-3
Checklists and record sheets, 94, 99, 195, 222
Closed-loop systems, see also *Glycols,*
Heat exchangers and Oil-based fluids
Operation, 7, 14-17, 24, 26, 38-43, 54-57
Inspection, 68, 74, 82
Troubleshooting, 108-111
Repair, 159, 162
Maintenance, 232
Coil-in-tube heat exchangers, 29
Colt, 150
Compatibility of fluids and materials, 23, 27, 37, 71, 129
Chart, E-1
Condensation inside collectors, 62-64, 110, 202
Controls,
Operation, 6-10, 13, 18, 33, 44-46, 50-57
Inspection, 85-92, 97, 101

Controls (cont.)
Troubleshooting, 105-119, 123-125, 131
Repair, 140, 152, 153, 172, 184, 187-190, 193
Maintenance, 207, 212, 217-220, 222, 224
Suppliers, D-2
Controlex, 86
Copper, E-1
Copper-nickel, 13
Current draw,
Heating elements, 195
Pumps, 80, 81, 90, 96, 106, 123, 124, 214
Daystar, 150
Delta-T, 51
Descaling, 171-173, 214, 215
Diaphragms, in expansion tanks,
Operation, 27, 38-40
Inspection, 74, 75
Troubleshooting, 120, 121
Repair, 160
Maintenance, 211, 212
Dow, 83, 128, 216, 229, D-3
Dowfrost, 84, 128, Bibliography-1
Dowtherm, Bibliography-1
Drainback systems,
Operation, 7, 16, 17, 26, 30, 43, 46, 54
Inspection, 68, 71, 82, 83, 96
Troubleshooting, 108-111, 122, 126
Repair, 162, 175, 176
Maintenance, 224
Schematic diagram, A-2
Draindown systems,
Operation, 7, 17, 18, 33, 34, 40, 43, 44, 45, 46, 53, 54, 56
Inspection, 68, 70, 82
Troubleshooting, 108-111, 121, 131
Repair, 162
Maintenance, 215
Flow rate, 236
Inventory, 245
Schematic diagram, 233
Suppliers, 247
DTT, 87, 119

EPDM, 27, 39, E-1
Escutcheon plates, as heat shields 147, 148, 188
Evacuated tube collectors, 2, 9, 11, 20, 21, 22, 63, 202, B-2
Expansion tanks
Operation, 15, 17, 26, 27, 38-40, 43
Inspection, 68, 74
Troubleshooting, 120, 121
Repair, 158, 160, 161, 178, 180, 185-187
Maintenance, 211, 212
Suppliers, D-2
Extrol, 186, 187

Fiberglas, 50
Filling closed loops, *see Charging closed loops*
Flange, 139, 140, 194
Flanges, 34, 76, 109, 139, 163, 170, 212
Fluorosilicone, E-1
Flow rates, *see specific system and Appendix B*
Flow-setters, 76, 212
Ford, D-3

Galvanic corrosion,
Inspection, 64, 66, 67
Troubleshooting, 130
Repair, 152, 155
Maintenance, 206, 207, 209
Galvanized steel,
Pipe, 26, 193, E-1
Pipe hangers, 130, 155, 209
Mounting hardware, 64, 144, 204

Galvanized steel (cont.),
Tanks, 30, 33, 38, 39, 96, 110, 130,138
Gaskets,
Operation, 14, 23, 27, 33
Inspection, 63-65, 71, 95
Troubleshooting, 123, 129
Repair, 138-144, 157, 163, 167, 173, 194
Maintenance, 202, 204, 206, 214
Inventory, C-5
Glass,
Operation, 20, 21, 30, 31, 32, 48
Inspection, 63, 75, 82
Troubleshooting, 122
Repair, 141, 142, 143, 158, 190
Maintenance, 201, 203, 212, 221
Inventory, C-5
Suppliers, D-3
Glycols,
Operation, 26, 27, 39, 40
Inspection, 75, 79, 83, 97, 127-129, 131
Repair, 160, 175-178, 180-187
Maintenance, 210, 216, 217, 224
Suppliers, D-3,
Goulds Pumps, D-1
Grounding,
Inspection, 66, 67, 75, 85, 95, 97
Troubleshooting, 105, 110, 119
Repair, 138, 152, 153, 188
Maintenance, 206, 207, 212, 217, 223
Grumman, 150, Bibliography-1
Grundfos, 169, D-1
Gulf Thermal, 150

Hangers, 155
Heat-conductive compounds, 154
Heat exchangers,
Operation, 7, 13-15, 17, 26-30, 34, 56
Inspection, 81, 82
Troubleshooting, 109, 110, 127, 131
Repair, 140, 171-175, 185, 186
Maintenance, 214, 215
Suppliers, D-2
Honeywell, 86, 154
Humming, 111
Hydrin, 27, 39, E-1

Impellers, of pumps, 79, 80, 124, 139, 166, 167, 168, 169, 170
Inclinometer, C-2
Inhibitors, 26, 83, 127, 128, 140, 175, 176, 216, 217
Insulation, pipe and tank, see also *Jackets*
Operation, 47-50
Inspection, 70-73, 93
Troubleshooting, 109, 110, 131
Repair, 138, 140, 141, 154-155, 157, 192
Maintenance, 209, 220, 221
Inventory, C-4
Suppliers, D-3
Insulgrease, 154
Insulsleeve, 48
Insultek, 48
Intech, 171
Ion-exchange, 83, 216
Iron,
in piping or pumps, 23, 24, 26, 173, 246, E-1
in water, 83, 127, 216
Isocyanurate, 48
ITT Bell and Gossett, 169, Bibliography-1 D-1- D-2

Jackets, insulation, for
Piping, 47-49,69, 72, 73, 141, 154, 155, 209, 221, C-4
Tanks, 50, 93, 192,193, 220

Latitude, B-3, B-4
Leaks,
Inspection, 62, 63, 68, 70-76, 81, 82, 93, 95-97
Troubleshooting, 108, 120-123, 129, 131
Repair, 138-141, 144, 147, 148, 150, 151, 156-161 164, 166, 173-175, 180, 184, 190-193
Maintenance, 202-204, 209, 211, 212, 214, 220-224
Lightning, 66, 95, 206
Lubrication, 23, 79, 96, 123, 162-165, 213, 223

Magnesium, 127
Manganese, 127
Meters,
BTU, 57, 247
Electrical, for
Inspection, 75, 80, 81, 86, 89, 90, 93
Troubleshooting, 111, 112, 115, 119, 123, 124
Repair, 152, 153, 162, 168
Maintenance, 207, 219, 220
Inventory, C-2
Flow, 76, 121-125
Monitoring, 55, 57
Mor-Flo, D-3
Morning star, 150
Myson, D-1

Neoprene, 206
Novan, 229, D-3

Ohms, 52, 86, 90, 112, 115, 117, 220
Oil-based solar fluids, see also G/yco/s
Operation, 10, 26-28,39
Inspection, 71,82, 85
Troubleshooting, 129
Repair, 140, 147, 156, 157, 162, 175, 176, 178-181
Maintenance, 210,217
Compatibility, E-1
Flow rates, B-2
Silicone oils, 26, 28, 71, 72, 85, 129, 140, 144, 147, 152, 154 156,189 204, 210, 217
Suppliers, D-3, E-1
Synthetic oils, 26, 27, 71, 129, 156, 157, 210, 217, E-1
Outgassing, in collectors, 63-66, 145, 202, 203
Oxygen, dissolved in water, 6, 26, 31, 126

Packing seals, pumps, 165, 166,212
Packings, valve, 37, 41, 71, 156, 157
Painting, 155, 204, 209
pH, 31, 83, 97, 126, 128, 140, 184, 216, 224
Phelps-Dodge, 149
Phoscopper, 150
Phosphoric acid, 171, 173
Photovoltaic, 1
Pipe dope, E-1
Pipe hangers, *see* also *Galvanized,*
Inspection, 66, 72, 95, 96
Troubleshooting, 130
Repair, 138, 140, 155
Maintenance, 209, 223
Inventory, C-4
Pitch, roofing, 147, 206
Polyethylene, 47
Polyisocyanurate, 48, 145, 248
Polypropylene, E-1
Polystyrene, 47
Porcelain, 31
Porosity, 129
Potentiometers, 86, 115, 119
Preheating systems, 8-12

Pressure gauges,
Operation, 33,55-57
Inspection, 76-79,97
Troubleshooting, 108-110, 121, 125,132
Repair, 139, 158, 159
Maintenance, 212
Suppliers, D-2
Pressure reducing valves, 33,40,75,129,224
Pressure relief valves, 33, 36, 68,73, 192, C-5, D-2
Pressure-temperature plugs, see also *Pressure gauges,* 55,139
Pumps,
Operation, 1, 5-17, 23-27, 34, 37, 38, 43, 50-53, 56, 57
Inspection, 73-80,82, 85-87,96
Troubleshooting, 106, 109, 110, 115, 119-125, 127, 130-132
Repair, 139, 161-170, 176, 178, 179,181-186
Maintenance, 212-215,218, 223
Flow rates, B-2
Inventory, C-3
Suppliers, D-1
PVC, 192
Pyramid, 87, 119, D-2
Pyrometer, 67

Radio Frequency (RF) noise, 52, 188
Re-inhibiting glycols, 175, 176
Read-outs, on controls 89, 119
Recharging closed loops, see *Charging closed loops*
Rectorseal, 156,210
Refilling closed loops, *see Charging closed loops*
Reflectors, under evacuated tube collectors, 21,22, 63, 202
Refractometer, 83, 84, 127, 128, 216, 217
Reinhibiting glycols, 83, 85, 128, 217
Reservoirs, 16, 17, 30, 82, 122
Resistors, 51, 87, 88, 89, 116, 117, 119, 218, C-2
Revere, 150, Bibliography-1
Rho Sigma, 87, 119, D-2
Robertshaw, 86
Rocky Mountain Solar Glass, D-3
Rollbond, 149, 150
Rotten egg smell, in water, 191
Rubatex, 48, 71, 154, 209
Rust, 204, 212

Sacrificial anodes, 32, 82, 93, 175, 215, 221
Saddles, 48, C-4
Scale on pipes and heat exchangers, *see Descaling and Water*
Scalestrip, 171, 173
Schrader valves, 38, 74, 75, 121, 160, 211
Screeching noises, in pumps, 111
Sealants,
Operation, 27, 28
Inspection, 64, 72
Troubleshooting, 129
Repair, 142, 144, 152, 154, 156, 177,179,189, 191
Maintenance, 204, 207, 208, 210
Inventory, C-3
Seals,
Operation, 14, 23, 27, 33, 35, 41, 42
Inspection, 65, 68, 71, 75, 95
Troubleshooting, 123, 129, 131
Repair, 138-140, 144, 147, 154, 156, 157, 161, 162, 163, 164 166, 167, 168, 174, 177, 179, 206,212,214,223
Seats, 27, 35, 37, 41, 42, 68, 127, 156, 162,177,179
Sensors,
Operation, 6, 7
Inspection, 50-55,66, 69, 70, 85-

93,95, 97
Sensors (cont.)
Troubleshooting, 105, 111-119, 131
Repair, 138, 140, 141, 152, 153, 154, 187-190, 193, 194
Maintenance, 207, 208, 217-220, 223,224
Inventory, C-5
Suppliers;. D-2
Shell and tube heat exchangers, see *Heat exchangers*
Silicone oils, *see Oil-based heat transfer fluids*
Silver solder and brazing alloy, 26, 129, 150,156, 174,209
SISCO, D-2
Sleeve bearings, 164, 165,213
Sludge, 83, 131
Snap-switches, 54,70
SolarVision, Bibliography-1
Solder,
Operation, 25
Troubleshooting, 129, 130
Repair, 147, 150, 151, 155-157, 174,178,189,191
Maintenance, 209, 210
Inventory, C-3
Solderless connectors, 189
Solenoid valves, 18, 44, 45
Spool valves, 45
Squeaking, in pumps 110
Stainless steel, 13, E-1
Staples, 90, 112, 154, 189, C-3
Steel, E-1
Stewart-Hall, 171
Storage tanks,
Operation, 1, 6-9, 11, 12, 14-17, 26-33, 36, 46, 50
Inspection, 74,93, 94, 97, 101
Troubleshooting, 108-111,131, 132
Repair, 141, 190-195
Maintenance, 220,221
Flow rates and volumes, B-2, B-3
Inventory, C-5
Suppliers, D-2, D-3
Strain relief, 154, 189, 208
Strainers, 110, 181
Sun-Pride, 229
Sunspool, 247
Sunstream, 150
Sunstrip, 149
Sunworks, 150
Swimming pools, 2,8, 12-13, 22-23, 83, 216
Synthetic oils, see *Oil-based heat transfer fluids*

Taco, 170, D-1, D-2
Tanks, *see* also *Storage tanks,*
Cement-lined, 33
Epoxy-lined, 30, 33, 191
Galvanized, 33
Glass-lined, 31, 32, 190, 221, D-2, D-3
Manways, 141,190
Phenolic resin-lined, 30, 33, 191
Stone-lined, 30, 32, 33, 190, D-3
Teflon, 27,93, 154, 156, 177, 191, 210, 221, E-1
Temperature and pressure relief valves, 33, 36, 37, 74, 192, 221, 224, C-5, D-2
Tempering valves, 73, 109, 130, 210, C-5
TempTrak, 87, 119
Terralite, 149
Thermafin, 149
Thermistors, 51, 52, 55, 69, 228
Thermometers, 34, 55, 56, 67, 131, 132,139,157,158,186
Thermosiphoning,
In closed loop systems, 15, 34, 45, 109,130, 131
Water heating systems, 18, 19
Thermostats, see *Controls*
Toxicity, 27, 81, 171, 215
Tube-in-tube heat exchangers, 28

Ultraviolet radiation, 48, 69,71, 72, 73, 143,154,208,209
Unglazed collectors, 2,23, B-2
Unsoldering, 147,156,178,210
Urethane, 48, 50
U.S. Solar, 150

Vacuum breakers, 33,46,122,
Valves,
Operation, 9, 13-18, 27, 33-38, 40, 42, 44-46,53
Inspection, 68, 71, 73-76, 78,80, 93,96,97
Troubleshooting, 108-110, 121, 123,124,127,129,130,131
Repair, 138, 139, 141, 149, 152, 156-160, 162, 163, 170, 177-182 184,186, 191-193
Maintenance, 208, 210-212, 217, 220-225
Inventory, C-5,
Suppliers, D-1, D-2
Vaughn Corporation, D-3
Vents, air, automatic and manual,
Operation, 33, 41, 42, 43, 46
Inspection, 68, 69,70
Troubleshooting, 108, 109, 110, 120,122,129
Repair, 161,162, 182, 184
Suppliers, D-1, D-2
Viton, 27, E-1
Volutes, of pumps, 80, 124, 139, 164, 167,168,170

Water,
Acidic, 126
City, E-1
Hardness, 81,83, 127,216
Loop, E-1
Potable, 24, 26, 27, 40, 81, 120, 171,214,215
Waterproofing,
Inspection, 69,71,72,95
Troubleshooting, 111
Maintenance, 170,208,209, 223
WATSCO, D-2.
Watts Regulator Company, D-2
Weep holes, 64, 65, 66, 110, 144, 145, 203,205
Welding, 160, 167, 173-175, 191
Western Solar, 149
Wicking, 164
Wiring,
Operation, 52
Inspection, 66, 67, 69, 75,85, 89, 90, 93, 95, 97
Troubleshooting, 105, 109-112, 115,131
Repair, 140, 141, 152-154, 163, 187-190, 193
Maintenance, 206-208, 212, 217, 218-220,222-224
Inventory, C-2-C-4

Young Radiator Company, D-2

Zerk fittings, 165, 213
Zinc, 26, 33, 129, 144, 204